TUSCALOOSA CITY WALK PROJECT
FOREST LAKE SECTION
DATA NETWORK HARDWARE / SYSTEM PROJECT

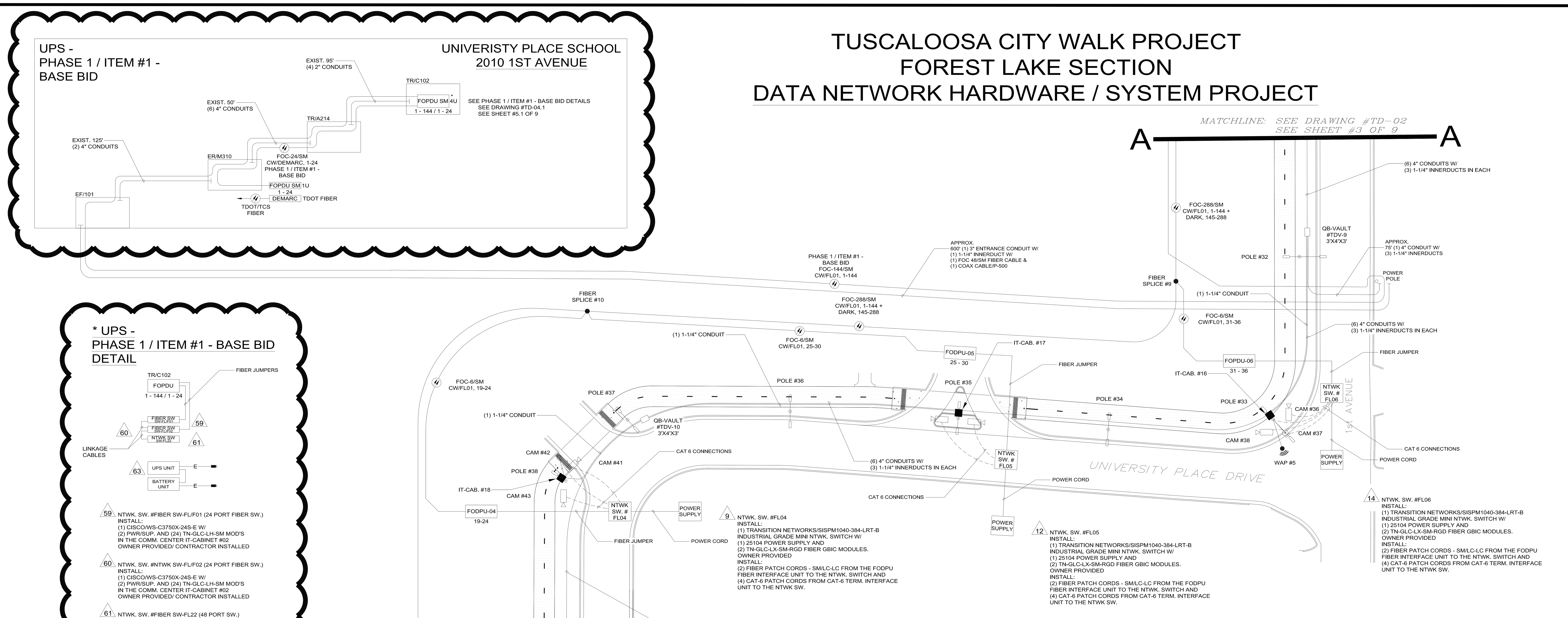

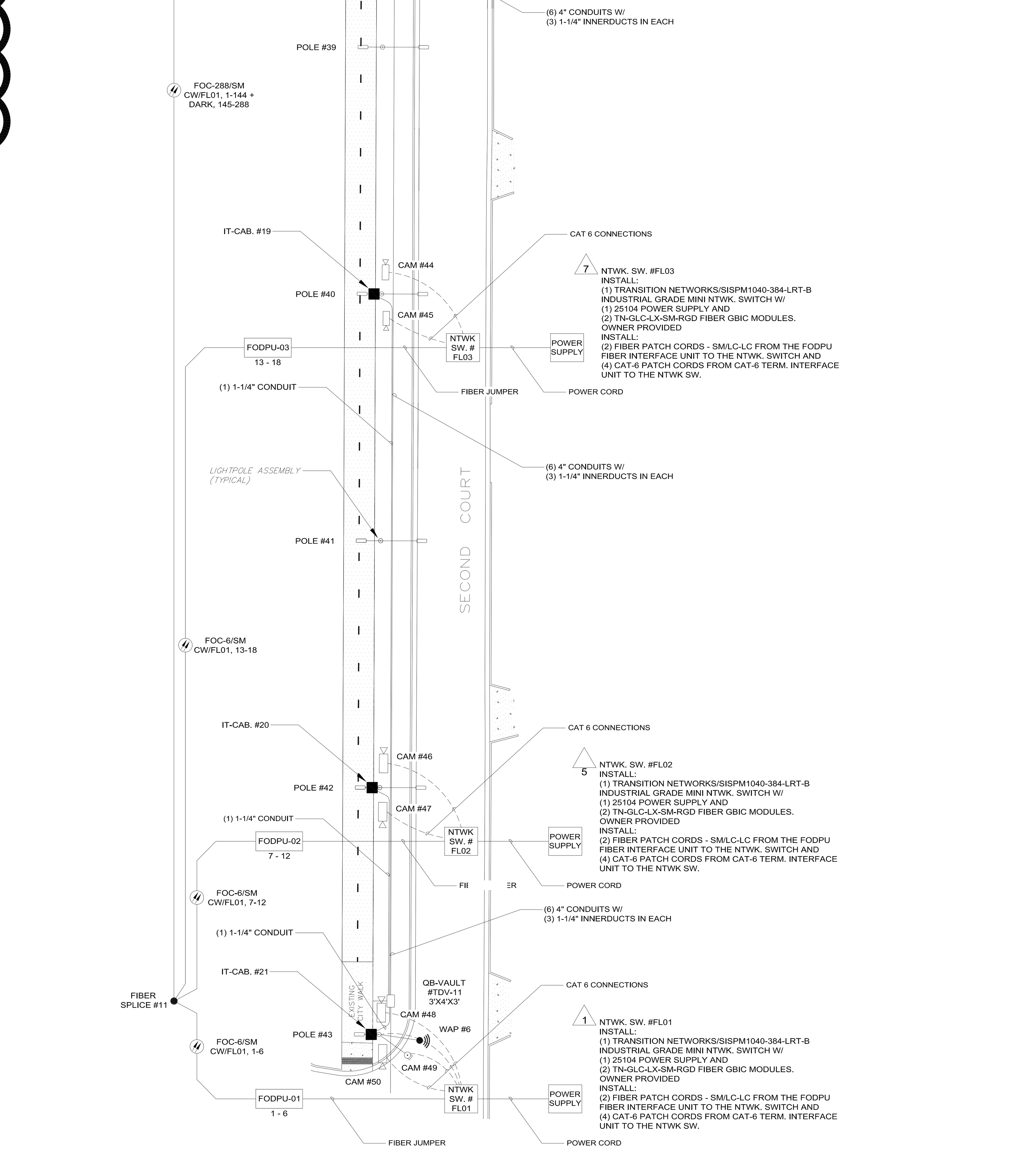

LEGEND

- WAP / WIRELESS ACCESS POINT
- QB / VAULTS 3' X 4' X 3' AND 4' X 6' X 4'
- DEAD / ZONE CAMERA
- IN-LINE CAMERAS
- POLE MOUNTED IT / COMM CABINET NEMA-4 / 16" X 16" X 6"

DATA NETWORK EQUIPMENT SCHEDULE

ITEM #	DRAWING #	POLE #	IT-CABINET #	FODPU FIBER TERM. UNIT #	FIBER ASSIGNMENTS	NETWORK SWITCH #	SWITCH TYPE	VLAN #	FIBER PORT #	NETWORK PORT #	CAMERA #	CAMERA TYPE	WAP #	NETWORK SYSTEM EQUIPMENT
1	TD-01	43	CAB21	FODPU-01	(FIBERS 1&2)	FL01	TRANSITION NETWORKS/ (1) SISPM1040-384-LRT-B SWITCH W/ (1) 25104 POWER SUPPLY AND (2) GBIC MOD'S/ TN-GLC-LX-SM-RGD OWNER PROVIDED / CONTRACTOR INSTALLED	1	1	1	CAM48	INLINE		TRANSITION NETWORKS/ (1) SISPM1040-384-LRT-B SWITCH W/ (1) 25104 POWER SUPPLY AND (2) GBIC MOD'S/ TN-GLC-LX-SM-RGD OWNER PROVIDED / CONTRACTOR INSTALLED
2	TD-01	43				FL01		1		2	CAM49	BLINDSPOT		
3	TD-01	43				FL01		1		3	CAM50	INLINE		
4	TD-01	43	CAB21	FODPU-01	(FIBERS 3&4)	FL01		2	2	5			WAP6	
5	TD-01	42	CAB20	FODPU-02	(FIBERS 7&8)	FL02	TRANSITION NETWORKS/ (1) SISPM1040-384-LRT-B SWITCH W/ (1) 25104 POWER SUPPLY AND (2) GBIC MOD'S/ TN-GLC-LX-SM-RGD OWNER PROVIDED / CONTRACTOR INSTALLED	1	1	1	CAM46	INLINE		TRANSITION NETWORKS/ (1) SISPM1040-384-LRT-B SWITCH W/ (1) 25104 POWER SUPPLY AND (2) GBIC MOD'S/ TN-GLC-LX-SM-RGD OWNER PROVIDED / CONTRACTOR INSTALLED
6	TD-01	42				FL02		1		2	CAM47	INLINE		
7	TD-01	40	CAB19	FODPU-03	(FIBERS 13&14)	FL03	TRANSITION NETWORKS/ (1) SISPM1040-384-LRT-B SWITCH W/ (1) 25104 POWER SUPPLY AND (2) GBIC MOD'S/ TN-GLC-LX-SM-RGD OWNER PROVIDED / CONTRACTOR INSTALLED	1	1	1	CAM44	INLINE		TRANSITION NETWORKS/ (1) SISPM1040-384-LRT-B SWITCH W/ (1) 25104 POWER SUPPLY AND (2) GBIC MOD'S/ TN-GLC-LX-SM-RGD OWNER PROVIDED / CONTRACTOR INSTALLED
8	TD-01	40				FL03		1		2	CAM45	INLINE		
9	TD-01	38	CAB18	FODPU-04	(FIBERS 19&20)	FL04	TRANSITION NETWORKS/ (1) SISPM1040-384-LRT-B SWITCH W/ (1) 25104 POWER SUPPLY AND (2) GBIC MOD'S/ TN-GLC-LX-SM-RGD OWNER PROVIDED / CONTRACTOR INSTALLED	1	1	1	CAM41	INLINE		TRANSITION NETWORKS/ (1) SISPM1040-384-LRT-B SWITCH W/ (1) 25104 POWER SUPPLY AND (2) GBIC MOD'S/ TN-GLC-LX-SM-RGD OWNER PROVIDED / CONTRACTOR INSTALLED
10	TD-01	38				FL04		1		2	CAM42	BLINDSPOT		
11	TD-01	38				FL04		1		3	CAM43	INLINE		
12	TD-01	35	CAB17	FODPU-05	(FIBERS 25&26)	FL05	TRANSITION NETWORKS/ (1) SISPM1040-384-LRT-B SWITCH W/ (1) 25104 POWER SUPPLY AND (2) GBIC MOD'S/ TN-GLC-LX-SM-RGD OWNER PROVIDED / CONTRACTOR INSTALLED	1	1	1	CAM39	INLINE		TRANSITION NETWORKS/ (1) SISPM1040-384-LRT-B SWITCH W/ (1) 25104 POWER SUPPLY AND (2) GBIC MOD'S/ TN-GLC-LX-SM-RGD OWNER PROVIDED / CONTRACTOR INSTALLED
13	TD-01	35				FL05		1		2	CAM40	INLINE		
14	TD-01	33	CAB16	FODPU-06	(FIBERS 31&32)	FL06	TRANSITION NETWORKS/ (1) SISPM1040-384-LRT-B SWITCH W/ (1) 25104 POWER SUPPLY AND (2) GBIC MOD'S/ TN-GLC-LX-SM-RGD OWNER PROVIDED / CONTRACTOR INSTALLED	1	1	1	CAM36	INLINE		TRANSITION NETWORKS/ (1) SISPM1040-384-LRT-B SWITCH W/ (1) 25104 POWER SUPPLY AND (2) GBIC MOD'S/ TN-GLC-LX-SM-RGD OWNER PROVIDED / CONTRACTOR INSTALLED
15	TD-01	33				FL06		1		2	CAM37	BLINDSPOT		
16	TD-01	33				FL06		1		3	CAM38	INLINE		
17	TD-01	33	CAB16	FODPU-06	(FIBERS 33&34)	FL06		2	2	5			WAP5	
18	TD-02	30	CAB15	FODPU-07	(FIBERS 37&38)	FL07	TRANSITION NETWORKS/ (1) SISPM1040-384-LRT-B SWITCH W/ (1) 25104 POWER SUPPLY AND (2) GBIC MOD'S/ TN-GLC-LX-SM-RGD OWNER PROVIDED / CONTRACTOR INSTALLED	1	1	1	CAM34	INLINE		TRANSITION NETWORKS/ (1) SISPM1040-384-LRT-B SWITCH W/ (1) 25104 POWER SUPPLY AND (2) GBIC MOD'S/ TN-GLC-LX-SM-RGD OWNER PROVIDED / CONTRACTOR INSTALLED
19	TD-02	30				FL07		1		2	CAM35	INLINE		
20	TD-02	28	CAB14	FODPU-08	(FIBERS 43&44)	FL08	TRANSITION NETWORKS/ (1) SISPM1040-384-LRT-B SWITCH W/ (1) 25104 POWER SUPPLY AND (2) GBIC MOD'S/ TN-GLC-LX-SM-RGD OWNER PROVIDED / CONTRACTOR INSTALLED	1	1	1	CAM32	INLINE		TRANSITION NETWORKS/ (1) SISPM1040-384-LRT-B SWITCH W/ (1) 25104 POWER SUPPLY AND (2) GBIC MOD'S/ TN-GLC-LX-SM-RGD OWNER PROVIDED / CONTRACTOR INSTALLED
21	TD-02	28				FL08		1		2	CAM33	INLINE		
22	TD-02	26	CAB13	FODPU-09	(FIBERS 49&50)	FL09	TRANSITION NETWORKS/ (1) SISPM1040-384-LRT-B SWITCH W/ (1) 25104 POWER SUPPLY AND (2) GBIC MOD'S/ TN-GLC-LX-SM-RGD OWNER PROVIDED / CONTRACTOR INSTALLED	1	1	1	CAM30	INLINE		TRANSITION NETWORKS/ (1) SISPM1040-384-LRT-B SWITCH W/ (1) 25104 POWER SUPPLY AND (2) GBIC MOD'S/ TN-GLC-LX-SM-RGD OWNER PROVIDED / CONTRACTOR INSTALLED
23	TD-02	26				FL09		1		2	CAM31	INLINE		
24	TD-02	24	CAB16	FODPU-10	(FIBERS 55&56)	FL10	TRANSITION NETWORKS/ (1) SISPM1040-384-LRT-B SWITCH W/ (1) 25104 POWER SUPPLY AND (2) GBIC MOD'S/ TN-GLC-LX-SM-RGD OWNER PROVIDED / CONTRACTOR INSTALLED	1	1	1	CAM27	INLINE		TRANSITION NETWORKS/ (1) SISPM1040-384-LRT-B SWITCH W/ (1) 25104 POWER SUPPLY AND (2) GBIC MOD'S/ TN-GLC-LX-SM-RGD OWNER PROVIDED / CONTRACTOR INSTALLED
25	TD-02	24				FL10		1		2	CAM28	BLINDSPOT		
26	TD-02	24				FL10		1		3	CAM29	INLINE		
27	TD-02	24	CAB16	FODPU-10	(FIBERS 57&58)	FL10		2	2	5			WAP4	
28	TD-02	22	CAB11	FODPU-11	(FIBERS 61&62)	FL11	TRANSITION NETWORKS/ (1) SISPM1040-384-LRT-B SWITCH W/ (1) 25104 POWER SUPPLY AND (2) GBIC MOD'S/ TN-GLC-LX-SM-RGD OWNER PROVIDED / CONTRACTOR INSTALLED	1	1	1	CAM24	INLINE		TRANSITION NETWORKS/ (1) SISPM1040-384-LRT-B SWITCH W/ (1) 25104 POWER SUPPLY AND (2) GBIC MOD'S/ TN-GLC-LX-SM-RGD OWNER PROVIDED / CONTRACTOR INSTALLED
29	TD-02	22				FL11		1		2	CAM25	BLINDSPOT		
30	TD-02	22				FL11		1		3	CAM26	INLINE		
31	TD-02	20	CAB10	FODPU-12	(FIBERS 67&68)	FL12	TRANSITION NETWORKS/ (1) SISPM1040-384-LRT-B SWITCH W/ (1) 25104 POWER SUPPLY AND (2) GBIC MOD'S/ TN-GLC-LX-SM-RGD OWNER PROVIDED / CONTRACTOR INSTALLED	1	1	1	CAM22	INLINE		TRANSITION NETWORKS/ (1) SISPM1040-384-LRT-B SWITCH W/ (1) 25104 POWER SUPPLY AND (2) GBIC MOD'S/ TN-GLC-LX-SM-RGD OWNER PROVIDED / CONTRACTOR INSTALLED
32	TD-02	20				FL12		1		2	CAM23	INLINE		
33	TD-02	17	CAB09	FODPU-13	(FIBERS 73&74)	FL13	TRANSITION NETWORKS/ (1) SISPM1040-384-LRT-B SWITCH W/ (1) 25104 POWER SUPPLY AND (2) GBIC MOD'S/ TN-GLC-LX-SM-RGD OWNER PROVIDED / CONTRACTOR INSTALLED	1	1	1	CAM19	INLINE		TRANSITION NETWORKS/ (1) SISPM1040-384-LRT-B SWITCH W/ (1) 25104 POWER SUPPLY AND (2) GBIC MOD'S/ TN-GLC-LX-SM-RGD OWNER PROVIDED / CONTRACTOR INSTALLED
34	TD-02	17				FL13		1		2	CAM20	BLINDSPOT		
35	TD-02	17				FL13		1		3	CAM21	INLINE		
36	TD-02	17	CAB09	FODPU-13	(FIBERS 75&76)	FL13		2	2	5			WAP3	
37	TD-03	15	CAB08	FODPU-14	(FIBERS 79&80)	FL14	TRANSITION NETWORKS/ (1) SISPM1040-384-LRT-B SWITCH W/ (1) 25104 POWER SUPPLY AND (2) GBIC MOD'S/ TN-GLC-LX-SM-RGD OWNER PROVIDED / CONTRACTOR INSTALLED	1	1	1	CAM17	INLINE		TRANSITION NETWORKS/ (1) SISPM1040-384-LRT-B SWITCH W/ (1) 25104 POWER SUPPLY AND (2) GBIC MOD'S/ TN-GLC-LX-SM-RGD OWNER PROVIDED / CONTRACTOR INSTALLED
38	TD-03	15				FL14		1		2	CAM18	INLINE		
39	TD-03	13	CAB07	FODPU-15	(FIBERS 85&86)	FL15	TRANSITION NETWORKS/ (1) SISPM1040-384-LRT-B SWITCH W/ (1) 25104 POWER SUPPLY AND (2) GBIC MOD'S/ TN-GLC-LX-SM-RGD OWNER PROVIDED / CONTRACTOR INSTALLED	1	1	1	CAM15	INLINE		TRANSITION NETWORKS/ (1) SISPM1040-384-LRT-B SWITCH W/ (1) 25104 POWER SUPPLY AND (2) GBIC MOD'S/ TN-GLC-LX-SM-RGD OWNER PROVIDED / CONTRACTOR INSTALLED
40	TD-03	13				FL15		1		2	CAM16	INLINE		
41	TD-03	11	CAB06	FODPU-16	(FIBERS 91&92)	FL16	TRANSITION NETWORKS/ (1) SISPM1040-384-LRT-B SWITCH W/ (1) 25104 POWER SUPPLY AND (2) GBIC MOD'S/ TN-GLC-LX-SM-RGD OWNER PROVIDED / CONTRACTOR INSTALLED	1	1	1	CAM13	INLINE		TRANSITION NETWORKS/ (1) SISPM1040-384-LRT-B SWITCH W/ (1) 25104 POWER SUPPLY AND (2) GBIC MOD'S/ TN-GLC-LX-SM-RGD OWNER PROVIDED / CONTRACTOR INSTALLED
42	TD-03	11				FL16		1		2	CAM14	INLINE		
43	TD-03	11	CAB06	FODPU-16	(FIBERS 93&94)	FL16		2	2	5			WAP2	
44	TD-03	9	CAB05	FODPU-17	(FIBERS 97&98)	FL17	TRANSITION NETWORKS/ (1) SISPM1040-384-LRT-B SWITCH W/ (1) 25104 POWER SUPPLY AND (2) GBIC MOD'S/ TN-GLC-LX-SM-RGD OWNER PROVIDED / CONTRACTOR INSTALLED	1	1	1	CAM11	INLINE		TRANSITION NETWORKS/ (1) SISPM1040-384-LRT-B SWITCH W/ (1) 25104 POWER SUPPLY AND (2) GBIC MOD'S/ TN-GLC-LX-SM-RGD OWNER PROVIDED / CONTRACTOR INSTALLED
45	TD-03	9				FL17		1		2	CAM12	INLINE		
46	TD-03	7	CAB04	FODPU-18	(FIBERS 103&104)	FL18	TRANSITION NETWORKS/ (1) SISPM1040-384-LRT-B SWITCH W/ (1) 25104 POWER SUPPLY AND (2) GBIC MOD'S/ TN-GLC-LX-SM-RGD OWNER PROVIDED / CONTRACTOR INSTALLED	1	1	1	CAM9	INLINE		TRANSITION NETWORKS/ (1) SISPM1040-384-LRT-B SWITCH W/ (1) 25104 POWER SUPPLY AND (2) GBIC MOD'S/ TN-GLC-LX-SM-RGD OWNER PROVIDED / CONTRACTOR INSTALLED
47	TD-03	7				FL18		1		2	CAM10	INLINE		
48	TD-03	5	CAB03	FODPU-19	(FIBERS 109&110)	FL19	TRANSITION NETWORKS/ (1) SISPM1040-384-LRT-B SWITCH W/ (1) 25104 POWER SUPPLY AND (2) GBIC MOD'S/ TN-GLC-LX-SM-RGD OWNER PROVIDED / CONTRACTOR INSTALLED	1	1	1	CAM7	INLINE		TRANSITION NETWORKS/ (1) SISPM1040-384-LRT-B SWITCH W/ (1) 25104 POWER SUPPLY AND (2) GBIC MOD'S/ TN-GLC-LX-SM-RGD OWNER PROVIDED / CONTRACTOR INSTALLED
49	TD-03	5				FL19		1		2	CAM8	INLINE		
50	TD-03	3	CAB02	FODPU-20	(FIBERS 115&116)	FL20	TRANSITION NETWORKS/ (1) SISPM1040-384-LRT-B SWITCH W/ (1) 25104 POWER SUPPLY AND (2) GBIC MOD'S/ TN-GLC-LX-SM-RGD OWNER PROVIDED / CONTRACTOR INSTALLED	1	1	1	CAM5	INLINE		TRANSITION NETWORKS/ (1) SISPM1040-384-LRT-B SWITCH W/ (1) 25104 POWER SUPPLY AND (2) GBIC MOD'S/ TN-GLC-LX-SM-RGD OWNER PROVIDED / CONTRACTOR INSTALLED
51	TD-03	3				FL20		1		2	CAM6	INLINE		
52	TD-03	1	CAB01	FODPU-21	(FIBERS 121&122)	FL21	TRANSITION NETWORKS/ (1) SISPM1040-384-LRT-B SWITCH W/ (1) 25104 POWER SUPPLY AND (2) GBIC MOD'S/ TN-GLC-LX-SM-RGD OWNER PROVIDED / CONTRACTOR INSTALLED	1	1	1	CAM1	INLINE		TRANSITION NETWORKS/ (1) SISPM1040-384-LRT-B SWITCH W/ (1) 25104 POWER SUPPLY AND (2) GBIC MOD'S/ TN-GLC-LX-SM-RGD OWNER PROVIDED / CONTRACTOR INSTALLED
53	TD-03	1				FL21		1		2	CAM2	BLINDSPOT		
54	TD-03	1				FL21		1		3	CAM3	INLINE		
55	TD-03	1				FL21		1		4	CAM4	INLINE		
56	TD-03	1	CAB01	FODPU-21	(FIBERS 123&124)	FL21		2	2	5			WAP1	
57	TD-04	COMFORT CNTR/ IT-COMM RM.	COMM. CNTR IT-CAB. #CO2	COMM. CNTR. NTWK LINKAGE CABLE	COMM. CNTR. NTWK LINKAGE CABLE	COMM. CNTR. NTWK SW-FL22 (48 PORT SW.)	CISCO/WS-C3750X-48P-E W/ (2) P/S	2	COMM. CNTR. NTWK LINKAGE CABLE	43			WAP7	CISCO/WS-C3750X-48P-E W/ (2) P/S
59	TD-03	COMFORT CNTR/ IT-COMM RM.	COMM. CNTR IT-CAB. #CO2	COMM. CNTR. NTWK LINKAGE CABLE	COMM. CNTR. NTWK LINKAGE CABLE	COMM. CNTR. NTWK FIBER SW-FL/F01 (24 PORT FIBER SW.)	CISOC/WS-C3750X-24S-E W/ (2) P/S & (24) TN-GLC-LH-SM MOD'S OWNER PROVIDED / CONTRACTOR INSTALLED		COMM. CNTR. NTWK LINKAGE CABLE		N/A	N/A		CISOC/WS-C3750X-24S-E W/ (2) P/S & (24) TN-GLC-LH-SM MOD'S OWNER PROVIDED / CONTRACTOR INSTALLED
60	TD-03	COMFORT CNTR/ IT-COMM RM.	COMM. CNTR IT-CAB. #CO2	COMM. CNTR. NTWK LINKAGE CABLE	COMM. CNTR. NTWK LINKAGE CABLE	COMM. CNTR. NTWK FIBER SW-FL/F02 (24 PORT FIBER SW.)	CISOC/WS-C3750X-24S-E W/ (2) P/S & (24) TN-GLC-LH-SM MOD'S OWNER PROVIDED / CONTRACTOR INSTALLED		COMM. CNTR. NTWK LINKAGE CABLE		N/A	N/A		CISOC/WS-C3750X-24S-E W/ (2) P/S & (24) TN-GLC-LH-SM MOD'S OWNER PROVIDED / CONTRACTOR INSTALLED
61	TD-03	COMFORT CNTR/ IT-COMM RM.	COMM. CNTR IT-CAB. #CO2	COMM. CNTR. NTWK LINKAGE CABLE	COMM. CNTR. NTWK LINKAGE CABLE	COMM. CNTR. NTWK SW-FL22 (48 PORT SW.)	CISOC/WS-C3750X-48P-E W/ (2) P/S OWNER PROVIDED / CONTRACTOR INSTALLED		COMM. CNTR. NTWK LINKAGE CABLE		N/A	N/A		CISOC/WS-C3750X-48P-E W/ (2) P/S OWNER PROVIDED / CONTRACTOR INSTALLED
63	TD-03	COMFORT CNTR/ IT-COMM RM.	COMM. CNTR IT-CAB. #CO1			COMM. CNTR. NTWK UPS UNIT- UPS01 W/ BATTERY UNIT- BAT01	EATON/ UPS UNIT/ PW9130L3000RT-XL2U N/ BATTERY UNIT/ PW9130N3000R-EBM2U OWNER PROVIDED / CONTRACTOR INSTALLED				N/A	N/A		EATON/ UPS UNIT/ PW9130L3000RT-XL2U N/ BATTERY UNIT/ PW9130N3000R-EBM2U OWNER PROVIDED / CONTRACTOR INSTALLED
64	TD-03	COMFORT CNTR/ IT-COMM RM.	COMM. CNTR IT-CAB. #CO2			COMM. CNTR. NTWK UPS UNIT- UPS02 W/ BATTERY UNIT- BAT02	EATON/ UPS UNIT/ PW9130L3000RT-XL2U N/ BATTERY UNIT/ PW9130N3000R-EBM2U OWNER PROVIDED / CONTRACTOR INSTALLED				N/A	N/A		EATON/ UPS UNIT/ PW9130L3000RT-XL2U N/ BATTERY UNIT/ PW9130N3000R-EBM2U OWNER PROVIDED / CONTRACTOR INSTALLED

NOTE #1:
ALL DATA NETWORK HARDWARE EQUIPMENT SHALL BE PURCHASED AND PROVIDED BY THE OWNER. THE CONTRACTOR SHALL INSTALL ALL EQUIPMENT AND PATCH CORDS/JUMPERS (CAT6 - COPPER / FIBER.)

NOTE #2:
THE CONTRACTOR / VENDOR SHALL MAKE UP AND PROVIDE AN INDUSTRIAL GRADE ELECTRICAL EXTENSION CORD 18" TO 24" IN LENGTH FROM THE TRANSITION NETWORKS POWER SUPPLIES TO THE ELECTRICAL OUTLET/ RECEPTACLE IN EACH IT-COMM. CABINET. THERE SHALL ALSO BE AN ELECTRICAL WIRING HARNESS PLACED BETWEEN THE TRANSITION NETWORKS SWITCHES AND THE TRANSITION NETWORKS POWER SUPPLIES FOR CONNECTION. THE CORDS AND HARNESS SHALL BE ROUTED AND NEATLY SECURED TO THE CABINET BACKBOARD. THE CONTRACTOR SHALL PROVIDE AND INSTALL THE DIN-RAILS IN ALL IT-CABINETS, SQUARE-D PT. #9080M339.

CONTRACTOR/VENDOR NOTE:
THE DATA NETWORK SYSTEM AND RELATED HARDWARE EQUIPMENT, AS INDICATED ON THIS PROJECT ARE FOR THE PURPOSE OF SETTING AN OVERALL DESIGN STANDARD. IT IS THE RESPONSIBILITY OF THE DATA NETWORKING HARDWARE/ SYSTEM CONTRACTOR/ VENDOR TO INSTALL THE HARDWARE EQUIPMENT, AS NOTED IN INSTALL SCHEDULE. THE OWNER SHALL PURCHASE AND PROVIDE ALL DATA NETWORK SWITCHES, POWER SUPPLIES, GBIC MODS, UPS'S/ AND BATTERY UNITS. THE OWNER SHALL SETUP AND PROGRAM THE EQUIPMENT AND TURN OVER TO THE CONTRACTOR FOR INSTALLATION.

DATA NETWORK SYSTEM PROJECT
CONTRACTOR NOTE:

1. The data concerning the Construction of the Comfort Center/ IT- Comm. Building, Entrance Conduits, Station Conduits, HVAC Units, and Electrical Panel, Circuits and Receptacle/Outlet and Ground Bar, Wireless Network Controllers, AV System EQMT, Digital Signage System EQMT, Security Camera System EQMT, LED Lighting Control & Monitoring System, Alarm & Door Access Control System, and the Data Storage EQMT System that are provided on this drawing are for information purposes only.
2. The placement of all these items are being installed under a separate contracts.
3. The Installation of all Network FW/Router EQMT, Network Data Switches (Fiber & Copper), Network Data Servers, KVM Units, UPS/Battery Units, with all Mounts and Mounting Hardware, Power Connections to the equipment, Ground Connections to the equipment, Fiber Patch Cords and the CAT-6 Patch Cords in the IT-Cabinets are the Data Network- Vendor/Contractor's Responsibility. The Network Data Switches and Power Supplies shall be provided by Owner.
4. All Fiber and CAT-6 Patch Cords are under a separate contract. All Patch Cords will be provided to the Vendors/Contractors for installation.

TALA/ Professional Services
1116 20TH STREET SOUTH, SUITE #306
BIRMINGHAM, ALABAMA 35205
PH. (205) 578-1993
www.TALAPro.com
OSP SPECIALIST
RCDD REGISTRATION NO.12777
OSP REGISTRATION NO. 141086
REGISTRATION NO. E2-02027
• TERRY S. WEAVER •
TALA PROJECT NO. TALA-0004 DESIGNER: TSW

REVISIONS			
NO.	DATE	DESCRIPTION	CHKD. APRD.

WALKER ASSOCIATES, INC.
ENGINEERING, PLANNING, GIS & SURVEYING
917 22nd Avenue - Suite B
Tuscaloosa, AL 35401
www.walkercivil.com
P (205) 561-3778 | F (205) 561-3779

PREPARED FOR
TUSCALOOSA CITY WALK PROJECT
FOREST LAKE SECTION
Data Network Hardware / System Project
City of Tuscaloosa
Tuscaloosa, Alabama

APPROVED BY:
REVISIONS: DATE: DESCRIPTION
SCALE: NTS
DRAWING No. TD-01
SHEET No. 2 OF 9
JOB NO: TALA-201401
DESIGNED BY: TSW
DRAWN BY: JWT
CHECKED BY: TSW
DATE: 11/19/2015
DRAWING NAME: TD-01

TUSCALOOSA CITY WALK PROJECT
FOREST LAKE SECTION
DATA NETWORK HARDWARE / SYSTEM PROJECT

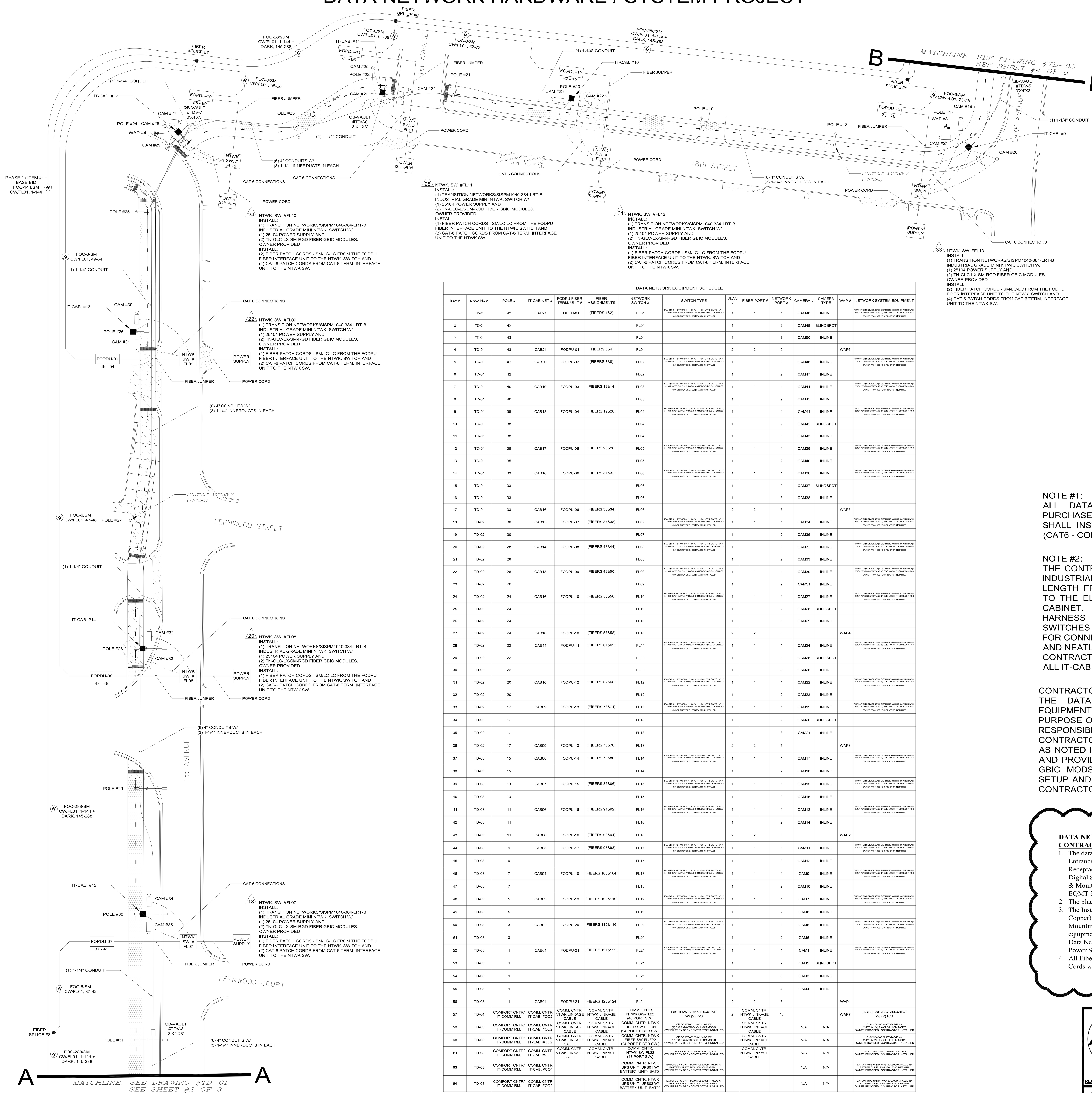

ITEM #	DRAWING #	POLE #	IT-CABINET #	FODPU FIBER TERM. UNIT #	FIBER ASSIGNMENTS	NETWORK SWITCH #	SWITCH TYPE	VLAN #	FIBER PORT #	NETWORK PORT #	CAMERA #	CAMERA TYPE	WAP #	NETWORK SYSTEM EQUIPMENT
1	TD-01	43	CAB21	FODPU-01	(FIBERS 1&2)	FL01	TRANSITION NETWORKS/ (1) SISPM1040-384-LRT-B SWITCH W/ (1) 25104 POWER SUPPLY AND (2) GBIC MOD'S/ TN-GLC-LX-SM-RGD OWNER PROVIDED / CONTRACTOR INSTALLED	1	1	1	CAM48	INLINE		TRANSITION NETWORKS/ (1) SISPM1040-384-LRT-B SWITCH W/ (1) 25104 POWER SUPPLY AND (2) GBIC MOD'S/ TN-GLC-LX-SM-RGD OWNER PROVIDED / CONTRACTOR INSTALLED
2	TD-01	43				FL01		1		2	CAM49	BLINDSPOT		
3	TD-01	43				FL01		1		3	CAM50	INLINE		
4	TD-01	43	CAB21	FODPU-01	(FIBERS 3&4)	FL01		2	2	5			WAP6	
5	TD-01	42	CAB20	FODPU-02	(FIBERS 7&8)	FL02	TRANSITION NETWORKS/ (1) SISPM1040-384-LRT-B SWITCH W/ (1) 25104 POWER SUPPLY AND (2) GBIC MOD'S/ TN-GLC-LX-SM-RGD OWNER PROVIDED / CONTRACTOR INSTALLED	1	1	1	CAM46	INLINE		TRANSITION NETWORKS/ (1) SISPM1040-384-LRT-B SWITCH W/ (1) 25104 POWER SUPPLY AND (2) GBIC MOD'S/ TN-GLC-LX-SM-RGD OWNER PROVIDED / CONTRACTOR INSTALLED
6	TD-01	42				FL02		1		2	CAM47	INLINE		
7	TD-01	40	CAB19	FODPU-03	(FIBERS 13&14)	FL03	TRANSITION NETWORKS/ (1) SISPM1040-384-LRT-B SWITCH W/ (1) 25104 POWER SUPPLY AND (2) GBIC MOD'S/ TN-GLC-LX-SM-RGD OWNER PROVIDED / CONTRACTOR INSTALLED	1	1	1	CAM44	INLINE		TRANSITION NETWORKS/ (1) SISPM1040-384-LRT-B SWITCH W/ (1) 25104 POWER SUPPLY AND (2) GBIC MOD'S/ TN-GLC-LX-SM-RGD OWNER PROVIDED / CONTRACTOR INSTALLED
8	TD-01	40				FL03		1		2	CAM45	INLINE		
9	TD-01	38	CAB18	FODPU-04	(FIBERS 19&20)	FL04	TRANSITION NETWORKS/ (1) SISPM1040-384-LRT-B SWITCH W/ (1) 25104 POWER SUPPLY AND (2) GBIC MOD'S/ TN-GLC-LX-SM-RGD OWNER PROVIDED / CONTRACTOR INSTALLED	1	1	1	CAM41	INLINE		TRANSITION NETWORKS/ (1) SISPM1040-384-LRT-B SWITCH W/ (1) 25104 POWER SUPPLY AND (2) GBIC MOD'S/ TN-GLC-LX-SM-RGD OWNER PROVIDED / CONTRACTOR INSTALLED
10	TD-01	38				FL04		1		2	CAM42	BLINDSPOT		
11	TD-01	38				FL04		1		3	CAM43	INLINE		
12	TD-01	35	CAB17	FODPU-05	(FIBERS 25&26)	FL05	TRANSITION NETWORKS/ (1) SISPM1040-384-LRT-B SWITCH W/ (1) 25104 POWER SUPPLY AND (2) GBIC MOD'S/ TN-GLC-LX-SM-RGD OWNER PROVIDED / CONTRACTOR INSTALLED	1	1	1	CAM39	INLINE		TRANSITION NETWORKS/ (1) SISPM1040-384-LRT-B SWITCH W/ (1) 25104 POWER SUPPLY AND (2) GBIC MOD'S/ TN-GLC-LX-SM-RGD OWNER PROVIDED / CONTRACTOR INSTALLED
13	TD-01	35				FL05		1		2	CAM40	INLINE		
14	TD-01	33	CAB16	FODPU-06	(FIBERS 31&32)	FL06	TRANSITION NETWORKS/ (1) SISPM1040-384-LRT-B SWITCH W/ (1) 25104 POWER SUPPLY AND (2) GBIC MOD'S/ TN-GLC-LX-SM-RGD OWNER PROVIDED / CONTRACTOR INSTALLED	1	1	1	CAM36	INLINE		TRANSITION NETWORKS/ (1) SISPM1040-384-LRT-B SWITCH W/ (1) 25104 POWER SUPPLY AND (2) GBIC MOD'S/ TN-GLC-LX-SM-RGD OWNER PROVIDED / CONTRACTOR INSTALLED
15	TD-01	33				FL06		1		2	CAM37	BLINDSPOT		
16	TD-01	33				FL06		1		3	CAM38	INLINE		
17	TD-01	33	CAB16	FODPU-06	(FIBERS 33&34)	FL06		2	2	5			WAP5	
18	TD-02	30	CAB15	FODPU-07	(FIBERS 37&38)	FL07	TRANSITION NETWORKS/ (1) SISPM1040-384-LRT-B SWITCH W/ (1) 25104 POWER SUPPLY AND (2) GBIC MOD'S/ TN-GLC-LX-SM-RGD OWNER PROVIDED / CONTRACTOR INSTALLED	1	1	1	CAM34	INLINE		TRANSITION NETWORKS/ (1) SISPM1040-384-LRT-B SWITCH W/ (1) 25104 POWER SUPPLY AND (2) GBIC MOD'S/ TN-GLC-LX-SM-RGD OWNER PROVIDED / CONTRACTOR INSTALLED
19	TD-02	30				FL07		1		2	CAM35	INLINE		
20	TD-02	28	CAB14	FODPU-08	(FIBERS 43&44)	FL08	TRANSITION NETWORKS/ (1) SISPM1040-384-LRT-B SWITCH W/ (1) 25104 POWER SUPPLY AND (2) GBIC MOD'S/ TN-GLC-LX-SM-RGD OWNER PROVIDED / CONTRACTOR INSTALLED	1	1	1	CAM32	INLINE		TRANSITION NETWORKS/ (1) SISPM1040-384-LRT-B SWITCH W/ (1) 25104 POWER SUPPLY AND (2) GBIC MOD'S/ TN-GLC-LX-SM-RGD OWNER PROVIDED / CONTRACTOR INSTALLED
21	TD-02	28				FL08		1		2	CAM33	INLINE		
22	TD-02	26	CAB13	FODPU-09	(FIBERS 49&50)	FL09	TRANSITION NETWORKS/ (1) SISPM1040-384-LRT-B SWITCH W/ (1) 25104 POWER SUPPLY AND (2) GBIC MOD'S/ TN-GLC-LX-SM-RGD OWNER PROVIDED / CONTRACTOR INSTALLED	1	1	1	CAM30	INLINE		TRANSITION NETWORKS/ (1) SISPM1040-384-LRT-B SWITCH W/ (1) 25104 POWER SUPPLY AND (2) GBIC MOD'S/ TN-GLC-LX-SM-RGD OWNER PROVIDED / CONTRACTOR INSTALLED
23	TD-02	26				FL09		1		2	CAM31	INLINE		
24	TD-02	24	CAB16	FODPU-10	(FIBERS 55&56)	FL10	TRANSITION NETWORKS/ (1) SISPM1040-384-LRT-B SWITCH W/ (1) 25104 POWER SUPPLY AND (2) GBIC MOD'S/ TN-GLC-LX-SM-RGD OWNER PROVIDED / CONTRACTOR INSTALLED	1	1	1	CAM27	INLINE		TRANSITION NETWORKS/ (1) SISPM1040-384-LRT-B SWITCH W/ (1) 25104 POWER SUPPLY AND (2) GBIC MOD'S/ TN-GLC-LX-SM-RGD OWNER PROVIDED / CONTRACTOR INSTALLED
25	TD-02	24				FL10		1		2	CAM28	BLINDSPOT		
26	TD-02	24				FL10		1		3	CAM29	INLINE		
27	TD-02	24	CAB16	FODPU-10	(FIBERS 57&58)	FL10		2	2	5			WAP4	
28	TD-02	22	CAB11	FODPU-11	(FIBERS 61&62)	FL11	TRANSITION NETWORKS/ (1) SISPM1040-384-LRT-B SWITCH W/ (1) 25104 POWER SUPPLY AND (2) GBIC MOD'S/ TN-GLC-LX-SM-RGD OWNER PROVIDED / CONTRACTOR INSTALLED	1	1	1	CAM24	INLINE		TRANSITION NETWORKS/ (1) SISPM1040-384-LRT-B SWITCH W/ (1) 25104 POWER SUPPLY AND (2) GBIC MOD'S/ TN-GLC-LX-SM-RGD OWNER PROVIDED / CONTRACTOR INSTALLED
29	TD-02	22				FL11		1		2	CAM25	BLINDSPOT		
30	TD-02	22				FL11		1		3	CAM26	INLINE		
31	TD-02	20	CAB10	FODPU-12	(FIBERS 67&68)	FL12	TRANSITION NETWORKS/ (1) SISPM1040-384-LRT-B SWITCH W/ (1) 25104 POWER SUPPLY AND (2) GBIC MOD'S/ TN-GLC-LX-SM-RGD OWNER PROVIDED / CONTRACTOR INSTALLED	1	1	1	CAM22	INLINE		TRANSITION NETWORKS/ (1) SISPM1040-384-LRT-B SWITCH W/ (1) 25104 POWER SUPPLY AND (2) GBIC MOD'S/ TN-GLC-LX-SM-RGD OWNER PROVIDED / CONTRACTOR INSTALLED
32	TD-02	20				FL12		1		2	CAM23	INLINE		
33	TD-02	17	CAB09	FODPU-13	(FIBERS 73&74)	FL13	TRANSITION NETWORKS/ (1) SISPM1040-384-LRT-B SWITCH W/ (1) 25104 POWER SUPPLY AND (2) GBIC MOD'S/ TN-GLC-LX-SM-RGD OWNER PROVIDED / CONTRACTOR INSTALLED	1	1	1	CAM19	INLINE		TRANSITION NETWORKS/ (1) SISPM1040-384-LRT-B SWITCH W/ (1) 25104 POWER SUPPLY AND (2) GBIC MOD'S/ TN-GLC-LX-SM-RGD OWNER PROVIDED / CONTRACTOR INSTALLED
34	TD-02	17				FL13		1		2	CAM20	BLINDSPOT		
35	TD-02	17				FL13		1		3	CAM21	INLINE		
36	TD-02	17	CAB09	FODPU-13	(FIBERS 75&76)	FL13		2	2	5			WAP3	
37	TD-03	15	CAB08	FODPU-14	(FIBERS 79&80)	FL14	TRANSITION NETWORKS/ (1) SISPM1040-384-LRT-B SWITCH W/ (1) 25104 POWER SUPPLY AND (2) GBIC MOD'S/ TN-GLC-LX-SM-RGD OWNER PROVIDED / CONTRACTOR INSTALLED	1	1	1	CAM17	INLINE		TRANSITION NETWORKS/ (1) SISPM1040-384-LRT-B SWITCH W/ (1) 25104 POWER SUPPLY AND (2) GBIC MOD'S/ TN-GLC-LX-SM-RGD OWNER PROVIDED / CONTRACTOR INSTALLED
38	TD-03	15				FL14		1		2	CAM18	INLINE		
39	TD-03	13	CAB07	FODPU-15	(FIBERS 85&86)	FL15	TRANSITION NETWORKS/ (1) SISPM1040-384-LRT-B SWITCH W/ (1) 25104 POWER SUPPLY AND (2) GBIC MOD'S/ TN-GLC-LX-SM-RGD OWNER PROVIDED / CONTRACTOR INSTALLED	1	1	1	CAM15	INLINE		TRANSITION NETWORKS/ (1) SISPM1040-384-LRT-B SWITCH W/ (1) 25104 POWER SUPPLY AND (2) GBIC MOD'S/ TN-GLC-LX-SM-RGD OWNER PROVIDED / CONTRACTOR INSTALLED
40	TD-03	13				FL15		1		2	CAM16	INLINE		
41	TD-03	11	CAB06	FODPU-16	(FIBERS 91&92)	FL16	TRANSITION NETWORKS/ (1) SISPM1040-384-LRT-B SWITCH W/ (1) 25104 POWER SUPPLY AND (2) GBIC MOD'S/ TN-GLC-LX-SM-RGD OWNER PROVIDED / CONTRACTOR INSTALLED	1	1	1	CAM13	INLINE		TRANSITION NETWORKS/ (1) SISPM1040-384-LRT-B SWITCH W/ (1) 25104 POWER SUPPLY AND (2) GBIC MOD'S/ TN-GLC-LX-SM-RGD OWNER PROVIDED / CONTRACTOR INSTALLED
42	TD-03	11				FL16		1		2	CAM14	INLINE		
43	TD-03	11	CAB06	FODPU-16	(FIBERS 93&94)	FL16		2	2	5			WAP2	
44	TD-03	9	CAB05	FODPU-17	(FIBERS 97&98)	FL17	TRANSITION NETWORKS/ (1) SISPM1040-384-LRT-B SWITCH W/ (1) 25104 POWER SUPPLY AND (2) GBIC MOD'S/ TN-GLC-LX-SM-RGD OWNER PROVIDED / CONTRACTOR INSTALLED	1	1	1	CAM11	INLINE		TRANSITION NETWORKS/ (1) SISPM1040-384-LRT-B SWITCH W/ (1) 25104 POWER SUPPLY AND (2) GBIC MOD'S/ TN-GLC-LX-SM-RGD OWNER PROVIDED / CONTRACTOR INSTALLED
45	TD-03	9				FL17		1		2	CAM12	INLINE		
46	TD-03	7	CAB04	FODPU-18	(FIBERS 103&104)	FL18	TRANSITION NETWORKS/ (1) SISPM1040-384-LRT-B SWITCH W/ (1) 25104 POWER SUPPLY AND (2) GBIC MOD'S/ TN-GLC-LX-SM-RGD OWNER PROVIDED / CONTRACTOR INSTALLED	1	1	1	CAM9	INLINE		TRANSITION NETWORKS/ (1) SISPM1040-384-LRT-B SWITCH W/ (1) 25104 POWER SUPPLY AND (2) GBIC MOD'S/ TN-GLC-LX-SM-RGD OWNER PROVIDED / CONTRACTOR INSTALLED
47	TD-03	7				FL18		1		2	CAM10	INLINE		
48	TD-03	5	CAB03	FODPU-19	(FIBERS 109&110)	FL19	TRANSITION NETWORKS/ (1) SISPM1040-384-LRT-B SWITCH W/ (1) 25104 POWER SUPPLY AND (2) GBIC MOD'S/ TN-GLC-LX-SM-RGD OWNER PROVIDED / CONTRACTOR INSTALLED	1	1	1	CAM7	INLINE		TRANSITION NETWORKS/ (1) SISPM1040-384-LRT-B SWITCH W/ (1) 25104 POWER SUPPLY AND (2) GBIC MOD'S/ TN-GLC-LX-SM-RGD OWNER PROVIDED / CONTRACTOR INSTALLED
49	TD-03	5				FL19		1		2	CAM8	INLINE		
50	TD-03	3	CAB02	FODPU-20	(FIBERS 115&116)	FL20	TRANSITION NETWORKS/ (1) SISPM1040-384-LRT-B SWITCH W/ (1) 25104 POWER SUPPLY AND (2) GBIC MOD'S/ TN-GLC-LX-SM-RGD OWNER PROVIDED / CONTRACTOR INSTALLED	1	1	1	CAM5	INLINE		TRANSITION NETWORKS/ (1) SISPM1040-384-LRT-B SWITCH W/ (1) 25104 POWER SUPPLY AND (2) GBIC MOD'S/ TN-GLC-LX-SM-RGD OWNER PROVIDED / CONTRACTOR INSTALLED
51	TD-03	3				FL20		1		2	CAM6	INLINE		
52	TD-03	1	CAB01	FODPU-21	(FIBERS 121&122)	FL21	TRANSITION NETWORKS/ (1) SISPM1040-384-LRT-B SWITCH W/ (1) 25104 POWER SUPPLY AND (2) GBIC MOD'S/ TN-GLC-LX-SM-RGD OWNER PROVIDED / CONTRACTOR INSTALLED	1	1	1	CAM1	INLINE		TRANSITION NETWORKS/ (1) SISPM1040-384-LRT-B SWITCH W/ (1) 25104 POWER SUPPLY AND (2) GBIC MOD'S/ TN-GLC-LX-SM-RGD OWNER PROVIDED / CONTRACTOR INSTALLED
53	TD-03	1				FL21		1		2	CAM2	BLINDSPOT		
54	TD-03	1				FL21		1		3	CAM3	INLINE		
55	TD-03	1				FL21		1		4	CAM4	INLINE		
56	TD-03	1	CAB01	FODPU-21	(FIBERS 123&124)	FL21		2	2	5			WAP1	
57	TD-04	COMFORT CNTR/ IT-COMM RM.	COMM. CNTR IT-CAB. #CO2	COMM. CNTR. NTWK LINKAGE CABLE	COMM. CNTR. NTWK LINKAGE CABLE	COMM. CNTR. NTWK SW-FL22 (48 PORT SW.)	CISCO/WS-C3750X-48P-E W/ (2) P/S	2	COMM. CNTR. NTWK LINKAGE CABLE	43			WAP7	CISCO/WS-C3750X-48P-E W/ (2) P/S
59	TD-03	COMFORT CNTR/ IT-COMM RM.	COMM. CNTR IT-CAB. #CO2	COMM. CNTR. NTWK LINKAGE CABLE	COMM. CNTR. NTWK LINKAGE CABLE	COMM. CNTR. NTWK FIBER SW-FL/F01 (24 PORT FIBER SW.)	CISOC/WS-C3750X-24S-E W/ (2) P/S & (24) TN-GLC-LH-SM MOD'S OWNER PROVIDED / CONTRACTOR INSTALLED		COMM. CNTR. NTWK LINKAGE CABLE		N/A	N/A		CISOC/WS-C3750X-24S-E W/ (2) P/S & (24) TN-GLC-LH-SM MOD'S OWNER PROVIDED / CONTRACTOR INSTALLED
60	TD-03	COMFORT CNTR/ IT-COMM RM.	COMM. CNTR IT-CAB. #CO2	COMM. CNTR. NTWK LINKAGE CABLE	COMM. CNTR. NTWK LINKAGE CABLE	COMM. CNTR. NTWK FIBER SW-FL/F02 (24 PORT FIBER SW.)	CISOC/WS-C3750X-24S-E W/ (2) P/S & (24) TN-GLC-LH-SM MOD'S OWNER PROVIDED / CONTRACTOR INSTALLED		COMM. CNTR. NTWK LINKAGE CABLE		N/A	N/A		CISOC/WS-C3750X-24S-E W/ (2) P/S & (24) TN-GLC-LH-SM MOD'S OWNER PROVIDED / CONTRACTOR INSTALLED
61	TD-03	COMFORT CNTR/ IT-COMM RM.	COMM. CNTR IT-CAB. #CO2	COMM. CNTR. NTWK LINKAGE CABLE	COMM. CNTR. NTWK LINKAGE CABLE	COMM. CNTR. NTWK SW-FL22 (48 PORT SW.)	CISOC/WS-C3750X-48P-E W/ (2) P/S OWNER PROVIDED / CONTRACTOR INSTALLED		COMM. CNTR. NTWK LINKAGE CABLE		N/A	N/A		CISOC/WS-C3750X-48P-E W/ (2) P/S OWNER PROVIDED / CONTRACTOR INSTALLED
63	TD-03	COMFORT CNTR/ IT-COMM RM.	COMM. CNTR IT-CAB. #CO1			COMM. CNTR. NTWK UPS UNIT- UPS01 W/ BATTERY UNIT- BAT01	EATON/ UPS UNIT/ PW9130L3000RT-XL2U N/ BATTERY UNIT/ PW9130N3000R-EBM2U OWNER PROVIDED / CONTRACTOR INSTALLED				N/A	N/A		EATON/ UPS UNIT/ PW9130L3000RT-XL2U N/ BATTERY UNIT/ PW9130N3000R-EBM2U OWNER PROVIDED / CONTRACTOR INSTALLED
64	TD-03	COMFORT CNTR/ IT-COMM RM.	COMM. CNTR IT-CAB. #CO2			COMM. CNTR. NTWK UPS UNIT- UPS02 W/ BATTERY UNIT- BAT02	EATON/ UPS UNIT/ PW9130L3000RT-XL2U N/ BATTERY UNIT/ PW9130N3000R-EBM2U OWNER PROVIDED / CONTRACTOR INSTALLED				N/A	N/A		EATON/ UPS UNIT/ PW9130L3000RT-XL2U N/ BATTERY UNIT/ PW9130N3000R-EBM2U OWNER PROVIDED / CONTRACTOR INSTALLED

NOTE #1:
ALL DATA NETWORK HARDWARE EQUIPMENT SHALL BE PURCHASED AND PROVIDED BY THE OWNER. THE CONTRACTOR SHALL INSTALL ALL EQUIPMENT AND PATCH CORDS/JUMPERS (CAT6 - COPPER / FIBER.)

NOTE #2:
THE CONTRACTOR / VENDOR SHALL MAKE UP AND PROVIDE AN INDUSTRIAL GRADE ELECTRICAL EXTENSION CORD 18" TO 24" IN LENGTH FROM THE TRANSITION NETWORKS POWER SUPPLIES TO THE ELECTRICAL OUTLET/ RECEPTACLE IN EACH IT-COMM. CABINET. THERE SHALL ALSO BE AN ELECTRICAL WIRING HARNESS PLACED BETWEEN THE TRANSITION NETWORKS SWITCHES AND THE TRANSITION NETWORKS POWER SUPPLIES FOR CONNECTION. THE CORDS AND HARNESS SHALL BE ROUTED AND NEATLY SECURED TO THE CABINET BACKBOARD. THE CONTRACTOR SHALL PROVIDE AND INSTALL THE DIN-RAILS IN ALL IT-CABINETS, SQUARE-D PT. #9080M339.

CONTRACTOR/VENDOR NOTE:
THE DATA NETWORK SYSTEM AND RELATED HARDWARE EQUIPMENT, AS INDICATED ON THIS PROJECT ARE FOR THE PURPOSE OF SETTING AN OVERALL DESIGN STANDARD. IT IS THE RESPONSIBILITY OF THE DATA NETWORKING HARDWARE/ SYSTEM CONTRACTOR/ VENDOR TO INSTALL THE HARDWARE EQUIPMENT, AS NOTED IN INSTALL SCHEDULE. THE OWNER SHALL PURCHASE AND PROVIDE ALL DATA NETWORK SWITCHES, POWER SUPPLIES, GBIC MODS, UPS'S/ AND BATTERY UNITS. THE OWNER SHALL SETUP AND PROGRAM THE EQUIPMENT AND TURN OVER TO THE CONTRACTOR FOR INSTALLATION.

DATA NETWORK SYSTEM PROJECT
CONTRACTOR NOTE:

1. The data concerning the Construction of the Comfort Center/ IT- Comm. Building, Entrance Conduits, Station Conduits, HVAC Units, and Electrical Panel, Circuits and Receptacle/Outlet and Ground Bar, Wireless Network Controllers, AV System EQMT, Digital Signage System EQMT, Security Camera System EQMT, LED Lighting Control & Monitoring System, Alarm & Door Access Control System, and the Data Storage EQMT System that are provided on this drawing are for information purposes only.
2. The placement of all these items are being installed under a separate contracts.
3. The Installation of all Network FW/Router EQMT, Network Data Switches (Fiber & Copper), Network Data Servers, KVM Units, UPS/Battery Units, with all Mounts and Mounting Hardware, Power Connections to the equipment, Ground Connections to the equipment, Fiber Patch Cords and the CAT-6 Patch Cords in the IT-Cabinets are the Data Network- Vendor/Contractor's Responsibility. The Network Data Switches and Power Supplies shall be provided by Owner.
4. All Fiber and CAT-6 Patch Cords are under a separate contract. All Patch Cords will be provided to the Vendors/Contractors for installation.

LEGEND

WAP	WAP / WIRELESS ACCESS POINT
	QB / VAULTS 3' X 4' X 3' AND 4' X 6' X 4'
	DEAD / ZONE CAMERA
	IN-LINE CAMERAS
■	POLE MOUNTED IT / COMM CABINET NEMA-4 / 16" X 16" X 6"

CERTIFIED NARTE ENGINEER
BICSI OSP SPECIALIST
REGISTRATION NO. E2-02027
RCDD REGISTRATION NO.12777
OSP REGISTRATION NO. 141086
TERRY S. WEAVER

TALA/ Professional Services
1116 20TH STREET SOUTH, SUITE #306
BIRMINGHAM, ALABAMA 35205
PH. (205) 578-1993
www.TALAPro.com
TALA PROJECT NO. TALA-0004 DESIGNER: TSW

NO.	DATE	REVISIONS DESCRIPTION	CHKD. APRD.

WALKER ASSOCIATES, INC.
ENGINEERING, PLANNING, GIS & SURVEYING
917 22nd Avenue - Suite B
Tuscaloosa, AL 35401
www.walkercivil.com
P (205) 561-3778 | F (205) 561-3779

PREPARED FOR

TUSCALOOSA CITY WALK PROJECT
FOREST LAKE SECTION
Data Network Hardware / System Project
City of Tuscaloosa
Tuscaloosa, Alabama

APPROVED BY:
REVISIONS: DATE: DESCRIPTION

SCALE: NTS
DRAWING No. IT-0001
SHEET No. 3 of 9
JOB NO: TALA-201401
DESIGNED BY: TSW
DRAWN BY: JWT
CHECKED BY: TSW
DATE: 11/19/2015
DRAWING NAME: TD-02

TUSCALOOSA CITY WALK PROJECT
FOREST LAKE SECTION
DATA NETWORK HARDWARE / SYSTEM PROJECT

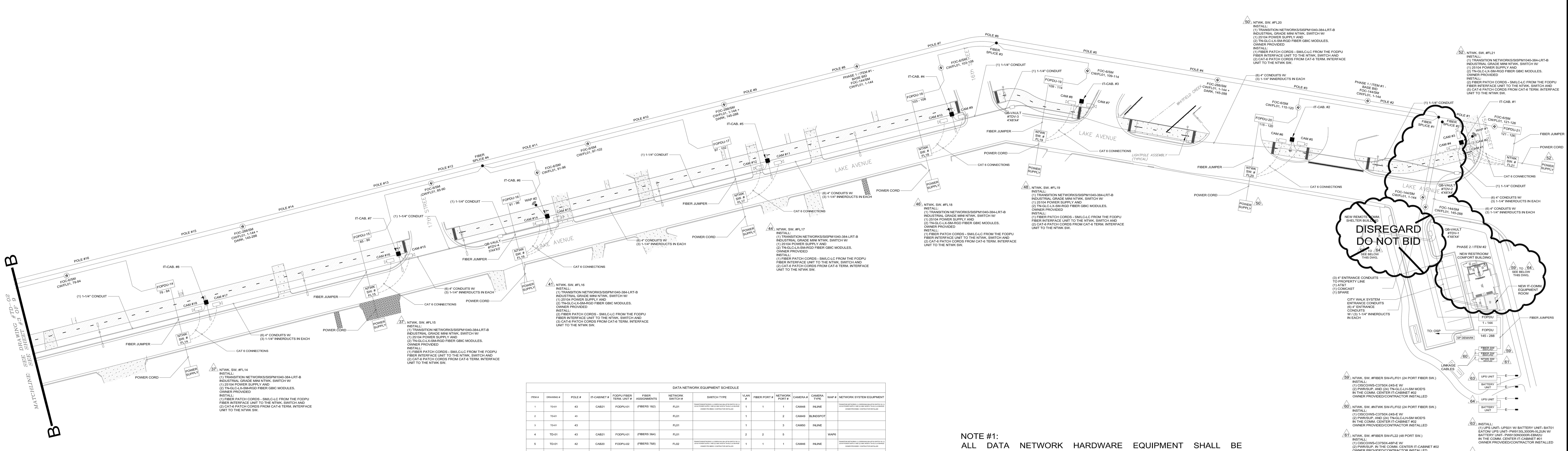

DATA NETWORK EQUIPMENT SCHEDULE

ITEM #	DRAWING #	POLE #	IT-CABINET #	FODPU FIBER TERM. UNIT #	FIBER ASSIGNMENTS	NETWORK SWITCH #	SWITCH TYPE	VLAN #	FIBER PORT #	NETWORK PORT #	CAMERA #	CAMERA TYPE	WAP #	NETWORK SYSTEM EQUIPMENT
1	TD-01	43	CAB21	FODPU-01	(FIBERS 1&2)	FL01	TRANSITION NETWORKS/ (1) SISPM1040-384-LRT-B SWITCH W/ (1) 25104 POWER SUPPLY AND (2) GBIC MOD'S/ TN-GLC-LX-SM-RGD OWNER PROVIDED / CONTRACTOR INSTALLED	1	1	1	CAM48	INLINE		TRANSITION NETWORKS/ (1) SISPM1040-384-LRT-B SWITCH W/ (1) 25104 POWER SUPPLY AND (2) GBIC MOD'S/ TN-GLC-LX-SM-RGD OWNER PROVIDED / CONTRACTOR INSTALLED
2	TD-01	43				FL01		1		2	CAM49	BLINDSPOT		
3	TD-01	43				FL01		1		3	CAM50	INLINE		
4	TD-01	43	CAB21	FODPU-01	(FIBERS 3&4)	FL01		2	2	5			WAP6	
5	TD-01	42	CAB20	FODPU-02	(FIBERS 7&8)	FL02	TRANSITION NETWORKS/ (1) SISPM1040-384-LRT-B SWITCH W/ (1) 25104 POWER SUPPLY AND (2) GBIC MOD'S/ TN-GLC-LX-SM-RGD OWNER PROVIDED / CONTRACTOR INSTALLED	1	1	1	CAM46	INLINE		TRANSITION NETWORKS/ (1) SISPM1040-384-LRT-B SWITCH W/ (1) 25104 POWER SUPPLY AND (2) GBIC MOD'S/ TN-GLC-LX-SM-RGD OWNER PROVIDED / CONTRACTOR INSTALLED
6	TD-01	42				FL02		1		2	CAM47	INLINE		
7	TD-01	40	CAB19	FODPU-03	(FIBERS 13&14)	FL03	TRANSITION NETWORKS/ (1) SISPM1040-384-LRT-B SWITCH W/ (1) 25104 POWER SUPPLY AND (2) GBIC MOD'S/ TN-GLC-LX-SM-RGD OWNER PROVIDED / CONTRACTOR INSTALLED	1	1	1	CAM44	INLINE		TRANSITION NETWORKS/ (1) SISPM1040-384-LRT-B SWITCH W/ (1) 25104 POWER SUPPLY AND (2) GBIC MOD'S/ TN-GLC-LX-SM-RGD OWNER PROVIDED / CONTRACTOR INSTALLED
8	TD-01	40				FL03		1		2	CAM45	INLINE		
9	TD-01	38	CAB18	FODPU-04	(FIBERS 19&20)	FL04	TRANSITION NETWORKS/ (1) SISPM1040-384-LRT-B SWITCH W/ (1) 25104 POWER SUPPLY AND (2) GBIC MOD'S/ TN-GLC-LX-SM-RGD OWNER PROVIDED / CONTRACTOR INSTALLED	1	1	1	CAM41	INLINE		TRANSITION NETWORKS/ (1) SISPM1040-384-LRT-B SWITCH W/ (1) 25104 POWER SUPPLY AND (2) GBIC MOD'S/ TN-GLC-LX-SM-RGD OWNER PROVIDED / CONTRACTOR INSTALLED
10	TD-01	38				FL04		1		2	CAM42	BLINDSPOT		
11	TD-01	38				FL04		1		3	CAM43	INLINE		
12	TD-01	35	CAB17	FODPU-05	(FIBERS 25&26)	FL05	TRANSITION NETWORKS/ (1) SISPM1040-384-LRT-B SWITCH W/ (1) 25104 POWER SUPPLY AND (2) GBIC MOD'S/ TN-GLC-LX-SM-RGD OWNER PROVIDED / CONTRACTOR INSTALLED	1	1	1	CAM39	INLINE		TRANSITION NETWORKS/ (1) SISPM1040-384-LRT-B SWITCH W/ (1) 25104 POWER SUPPLY AND (2) GBIC MOD'S/ TN-GLC-LX-SM-RGD OWNER PROVIDED / CONTRACTOR INSTALLED
13	TD-01	35				FL05		1		2	CAM40	INLINE		
14	TD-01	33	CAB16	FODPU-06	(FIBERS 31&32)	FL06	TRANSITION NETWORKS/ (1) SISPM1040-384-LRT-B SWITCH W/ (1) 25104 POWER SUPPLY AND (2) GBIC MOD'S/ TN-GLC-LX-SM-RGD OWNER PROVIDED / CONTRACTOR INSTALLED	1	1	1	CAM36	INLINE		TRANSITION NETWORKS/ (1) SISPM1040-384-LRT-B SWITCH W/ (1) 25104 POWER SUPPLY AND (2) GBIC MOD'S/ TN-GLC-LX-SM-RGD OWNER PROVIDED / CONTRACTOR INSTALLED
15	TD-01	33				FL06		1		2	CAM37	BLINDSPOT		
16	TD-01	33				FL06		1		3	CAM38	INLINE		
17	TD-01	33	CAB16	FODPU-06	(FIBERS 33&34)	FL06		2	2	5			WAP5	
18	TD-02	30	CAB15	FODPU-07	(FIBERS 37&38)	FL07	TRANSITION NETWORKS/ (1) SISPM1040-384-LRT-B SWITCH W/ (1) 25104 POWER SUPPLY AND (2) GBIC MOD'S/ TN-GLC-LX-SM-RGD OWNER PROVIDED / CONTRACTOR INSTALLED	1	1	1	CAM34	INLINE		TRANSITION NETWORKS/ (1) SISPM1040-384-LRT-B SWITCH W/ (1) 25104 POWER SUPPLY AND (2) GBIC MOD'S/ TN-GLC-LX-SM-RGD OWNER PROVIDED / CONTRACTOR INSTALLED
19	TD-02	30				FL07		1		2	CAM35	INLINE		
20	TD-02	28	CAB14	FODPU-08	(FIBERS 43&44)	FL08	TRANSITION NETWORKS/ (1) SISPM1040-384-LRT-B SWITCH W/ (1) 25104 POWER SUPPLY AND (2) GBIC MOD'S/ TN-GLC-LX-SM-RGD OWNER PROVIDED / CONTRACTOR INSTALLED	1	1	1	CAM32	INLINE		TRANSITION NETWORKS/ (1) SISPM1040-384-LRT-B SWITCH W/ (1) 25104 POWER SUPPLY AND (2) GBIC MOD'S/ TN-GLC-LX-SM-RGD OWNER PROVIDED / CONTRACTOR INSTALLED
21	TD-02	28				FL08		1		2	CAM33	INLINE		
22	TD-02	26	CAB13	FODPU-09	(FIBERS 49&50)	FL09	TRANSITION NETWORKS/ (1) SISPM1040-384-LRT-B SWITCH W/ (1) 25104 POWER SUPPLY AND (2) GBIC MOD'S/ TN-GLC-LX-SM-RGD OWNER PROVIDED / CONTRACTOR INSTALLED	1	1	1	CAM30	INLINE		TRANSITION NETWORKS/ (1) SISPM1040-384-LRT-B SWITCH W/ (1) 25104 POWER SUPPLY AND (2) GBIC MOD'S/ TN-GLC-LX-SM-RGD OWNER PROVIDED / CONTRACTOR INSTALLED
23	TD-02	26				FL09		1		2	CAM31	INLINE		
24	TD-02	24	CAB16	FODPU-10	(FIBERS 55&56)	FL10	TRANSITION NETWORKS/ (1) SISPM1040-384-LRT-B SWITCH W/ (1) 25104 POWER SUPPLY AND (2) GBIC MOD'S/ TN-GLC-LX-SM-RGD OWNER PROVIDED / CONTRACTOR INSTALLED	1	1	1	CAM27	INLINE		TRANSITION NETWORKS/ (1) SISPM1040-384-LRT-B SWITCH W/ (1) 25104 POWER SUPPLY AND (2) GBIC MOD'S/ TN-GLC-LX-SM-RGD OWNER PROVIDED / CONTRACTOR INSTALLED
25	TD-02	24				FL10		1		2	CAM28	BLINDSPOT		
26	TD-02	24				FL10		1		3	CAM29	INLINE		
27	TD-02	24	CAB16	FODPU-10	(FIBERS 57&58)	FL10		2	2	5			WAP4	
28	TD-02	22	CAB11	FODPU-11	(FIBERS 61&62)	FL11	TRANSITION NETWORKS/ (1) SISPM1040-384-LRT-B SWITCH W/ (1) 25104 POWER SUPPLY AND (2) GBIC MOD'S/ TN-GLC-LX-SM-RGD OWNER PROVIDED / CONTRACTOR INSTALLED	1	1	1	CAM24	INLINE		TRANSITION NETWORKS/ (1) SISPM1040-384-LRT-B SWITCH W/ (1) 25104 POWER SUPPLY AND (2) GBIC MOD'S/ TN-GLC-LX-SM-RGD OWNER PROVIDED / CONTRACTOR INSTALLED
29	TD-02	22				FL11		1		2	CAM25	BLINDSPOT		
30	TD-02	22				FL11		1		3	CAM26	INLINE		
31	TD-02	20	CAB10	FODPU-12	(FIBERS 67&68)	FL12	TRANSITION NETWORKS/ (1) SISPM1040-384-LRT-B SWITCH W/ (1) 25104 POWER SUPPLY AND (2) GBIC MOD'S/ TN-GLC-LX-SM-RGD OWNER PROVIDED / CONTRACTOR INSTALLED	1	1	1	CAM22	INLINE		TRANSITION NETWORKS/ (1) SISPM1040-384-LRT-B SWITCH W/ (1) 25104 POWER SUPPLY AND (2) GBIC MOD'S/ TN-GLC-LX-SM-RGD OWNER PROVIDED / CONTRACTOR INSTALLED
32	TD-02	20				FL12		1		2	CAM23	INLINE		
33	TD-02	17	CAB09	FODPU-13	(FIBERS 73&74)	FL13	TRANSITION NETWORKS/ (1) SISPM1040-384-LRT-B SWITCH W/ (1) 25104 POWER SUPPLY AND (2) GBIC MOD'S/ TN-GLC-LX-SM-RGD OWNER PROVIDED / CONTRACTOR INSTALLED	1	1	1	CAM19	INLINE		TRANSITION NETWORKS/ (1) SISPM1040-384-LRT-B SWITCH W/ (1) 25104 POWER SUPPLY AND (2) GBIC MOD'S/ TN-GLC-LX-SM-RGD OWNER PROVIDED / CONTRACTOR INSTALLED
34	TD-02	17				FL13		1		2	CAM20	BLINDSPOT		
35	TD-02	17				FL13		1		3	CAM21	INLINE		
36	TD-02	17	CAB09	FODPU-13	(FIBERS 75&76)	FL13		2	2	5			WAP3	
37	TD-03	15	CAB08	FODPU-14	(FIBERS 79&80)	FL14	TRANSITION NETWORKS/ (1) SISPM1040-384-LRT-B SWITCH W/ (1) 25104 POWER SUPPLY AND (2) GBIC MOD'S/ TN-GLC-LX-SM-RGD OWNER PROVIDED / CONTRACTOR INSTALLED	1	1	1	CAM17	INLINE		TRANSITION NETWORKS/ (1) SISPM1040-384-LRT-B SWITCH W/ (1) 25104 POWER SUPPLY AND (2) GBIC MOD'S/ TN-GLC-LX-SM-RGD OWNER PROVIDED / CONTRACTOR INSTALLED
38	TD-03	15				FL14		1		2	CAM18	INLINE		
39	TD-03	13	CAB07	FODPU-15	(FIBERS 85&86)	FL15	TRANSITION NETWORKS/ (1) SISPM1040-384-LRT-B SWITCH W/ (1) 25104 POWER SUPPLY AND (2) GBIC MOD'S/ TN-GLC-LX-SM-RGD OWNER PROVIDED / CONTRACTOR INSTALLED	1	1	1	CAM15	INLINE		TRANSITION NETWORKS/ (1) SISPM1040-384-LRT-B SWITCH W/ (1) 25104 POWER SUPPLY AND (2) GBIC MOD'S/ TN-GLC-LX-SM-RGD OWNER PROVIDED / CONTRACTOR INSTALLED
40	TD-03	13				FL15		1		2	CAM16	INLINE		
41	TD-03	11	CAB06	FODPU-16	(FIBERS 91&92)	FL16	TRANSITION NETWORKS/ (1) SISPM1040-384-LRT-B SWITCH W/ (1) 25104 POWER SUPPLY AND (2) GBIC MOD'S/ TN-GLC-LX-SM-RGD OWNER PROVIDED / CONTRACTOR INSTALLED	1	1	1	CAM13	INLINE		TRANSITION NETWORKS/ (1) SISPM1040-384-LRT-B SWITCH W/ (1) 25104 POWER SUPPLY AND (2) GBIC MOD'S/ TN-GLC-LX-SM-RGD OWNER PROVIDED / CONTRACTOR INSTALLED
42	TD-03	11				FL16		1		2	CAM14	INLINE		
43	TD-03	11	CAB06	FODPU-16	(FIBERS 93&94)	FL16		2	2	5			WAP2	
44	TD-03	9	CAB05	FODPU-17	(FIBERS 97&98)	FL17	TRANSITION NETWORKS/ (1) SISPM1040-384-LRT-B SWITCH W/ (1) 25104 POWER SUPPLY AND (2) GBIC MOD'S/ TN-GLC-LX-SM-RGD OWNER PROVIDED / CONTRACTOR INSTALLED	1	1	1	CAM11	INLINE		TRANSITION NETWORKS/ (1) SISPM1040-384-LRT-B SWITCH W/ (1) 25104 POWER SUPPLY AND (2) GBIC MOD'S/ TN-GLC-LX-SM-RGD OWNER PROVIDED / CONTRACTOR INSTALLED
45	TD-03	9				FL17		1		2	CAM12	INLINE		
46	TD-03	7	CAB04	FODPU-18	(FIBERS 103&104)	FL18	TRANSITION NETWORKS/ (1) SISPM1040-384-LRT-B SWITCH W/ (1) 25104 POWER SUPPLY AND (2) GBIC MOD'S/ TN-GLC-LX-SM-RGD OWNER PROVIDED / CONTRACTOR INSTALLED	1	1	1	CAM9	INLINE		TRANSITION NETWORKS/ (1) SISPM1040-384-LRT-B SWITCH W/ (1) 25104 POWER SUPPLY AND (2) GBIC MOD'S/ TN-GLC-LX-SM-RGD OWNER PROVIDED / CONTRACTOR INSTALLED
47	TD-03	7				FL18		1		2	CAM10	INLINE		
48	TD-03	5	CAB03	FODPU-19	(FIBERS 109&110)	FL19	TRANSITION NETWORKS/ (1) SISPM1040-384-LRT-B SWITCH W/ (1) 25104 POWER SUPPLY AND (2) GBIC MOD'S/ TN-GLC-LX-SM-RGD OWNER PROVIDED / CONTRACTOR INSTALLED	1	1	1	CAM7	INLINE		TRANSITION NETWORKS/ (1) SISPM1040-384-LRT-B SWITCH W/ (1) 25104 POWER SUPPLY AND (2) GBIC MOD'S/ TN-GLC-LX-SM-RGD OWNER PROVIDED / CONTRACTOR INSTALLED
49	TD-03	5				FL19		1		2	CAM8	INLINE		
50	TD-03	3	CAB02	FODPU-20	(FIBERS 115&116)	FL20	TRANSITION NETWORKS/ (1) SISPM1040-384-LRT-B SWITCH W/ (1) 25104 POWER SUPPLY AND (2) GBIC MOD'S/ TN-GLC-LX-SM-RGD OWNER PROVIDED / CONTRACTOR INSTALLED	1	1	1	CAM5	INLINE		TRANSITION NETWORKS/ (1) SISPM1040-384-LRT-B SWITCH W/ (1) 25104 POWER SUPPLY AND (2) GBIC MOD'S/ TN-GLC-LX-SM-RGD OWNER PROVIDED / CONTRACTOR INSTALLED
51	TD-03	3				FL20		1		2	CAM6	INLINE		
52	TD-03	1	CAB01	FODPU-21	(FIBERS 121&122)	FL21	TRANSITION NETWORKS/ (1) SISPM1040-384-LRT-B SWITCH W/ (1) 25104 POWER SUPPLY AND (2) GBIC MOD'S/ TN-GLC-LX-SM-RGD OWNER PROVIDED / CONTRACTOR INSTALLED	1	1	1	CAM1	INLINE		TRANSITION NETWORKS/ (1) SISPM1040-384-LRT-B SWITCH W/ (1) 25104 POWER SUPPLY AND (2) GBIC MOD'S/ TN-GLC-LX-SM-RGD OWNER PROVIDED / CONTRACTOR INSTALLED
53	TD-03	1				FL21		1		2	CAM2	BLINDSPOT		
54	TD-03	1				FL21		1		3	CAM3	INLINE		
55	TD-03	1				FL21		1		4	CAM4	INLINE		
56	TD-03	1	CAB01	FODPU-21	(FIBERS 123&124)	FL21		2	2	5			WAP1	
57	TD-04	COMFORT CNTR/ IT-COMM RM.	COMM. CNTR IT-CAB. #CO2	COMM. CNTR. NTWK LINKAGE CABLE	COMM. CNTR. NTWK LINKAGE CABLE	COMM. CNTR. NTWK SW-FL22 (48 PORT SW.)	CISCO/WS-C3750X-48P-E W/ (2) P/S	2	COMM. CNTR. NTWK LINKAGE CABLE	43			WAP7	CISCO/WS-C3750X-48P-E W/ (2) P/S
59	TD-03	COMFORT CNTR/ IT-COMM RM.	COMM. CNTR IT-CAB. #CO2	COMM. CNTR. NTWK LINKAGE CABLE	COMM. CNTR. NTWK LINKAGE CABLE	COMM. CNTR. NTWK FIBER SW-FL/F01 (24 PORT FIBER SW.)	CISOC/WS-C3750X-24S-E W/ (2) P/S & (24) TN-GLC-LH-SM MOD'S OWNER PROVIDED / CONTRACTOR INSTALLED		COMM. CNTR. NTWK LINKAGE CABLE		N/A	N/A		CISOC/WS-C3750X-24S-E W/ (2) P/S & (24) TN-GLC-LH-SM MOD'S OWNER PROVIDED / CONTRACTOR INSTALLED
60	TD-03	COMFORT CNTR/ IT-COMM RM.	COMM. CNTR IT-CAB. #CO2	COMM. CNTR. NTWK LINKAGE CABLE	COMM. CNTR. NTWK LINKAGE CABLE	COMM. CNTR. NTWK FIBER SW-FL/F02 (24 PORT FIBER SW.)	CISOC/WS-C3750X-24S-E W/ (2) P/S & (24) TN-GLC-LH-SM MOD'S OWNER PROVIDED / CONTRACTOR INSTALLED		COMM. CNTR. NTWK LINKAGE CABLE		N/A	N/A		CISOC/WS-C3750X-24S-E W/ (2) P/S & (24) TN-GLC-LH-SM MOD'S OWNER PROVIDED / CONTRACTOR INSTALLED
61	TD-03	COMFORT CNTR/ IT-COMM RM.	COMM. CNTR IT-CAB. #CO2	COMM. CNTR. NTWK LINKAGE CABLE	COMM. CNTR. NTWK LINKAGE CABLE	COMM. CNTR. NTWK SW-FL22 (48 PORT SW.)	CISOC/WS-C3750X-48P-E W/ (2) P/S OWNER PROVIDED / CONTRACTOR INSTALLED		COMM. CNTR. NTWK LINKAGE CABLE		N/A	N/A		CISOC/WS-C3750X-48P-E W/ (2) P/S OWNER PROVIDED / CONTRACTOR INSTALLED
63	TD-03	COMFORT CNTR/ IT-COMM RM.	COMM. CNTR IT-CAB. #CO1			COMM. CNTR. NTWK UPS UNIT- UPS01 W/ BATTERY UNIT- BAT01	EATON/ UPS UNIT/ PW9130L3000RT-XL2U N/ BATTERY UNIT/ PW9130N3000R-EBM2U OWNER PROVIDED / CONTRACTOR INSTALLED				N/A	N/A		EATON/ UPS UNIT/ PW9130L3000RT-XL2U N/ BATTERY UNIT/ PW9130N3000R-EBM2U OWNER PROVIDED / CONTRACTOR INSTALLED
64	TD-03	COMFORT CNTR/ IT-COMM RM.	COMM. CNTR IT-CAB. #CO2			COMM. CNTR. NTWK UPS UNIT- UPS02 W/ BATTERY UNIT- BAT02	EATON/ UPS UNIT/ PW9130L3000RT-XL2U N/ BATTERY UNIT/ PW9130N3000R-EBM2U OWNER PROVIDED / CONTRACTOR INSTALLED				N/A	N/A		EATON/ UPS UNIT/ PW9130L3000RT-XL2U N/ BATTERY UNIT/ PW9130N3000R-EBM2U OWNER PROVIDED / CONTRACTOR INSTALLED

NOTE #1:
ALL DATA NETWORK HARDWARE EQUIPMENT SHALL BE PURCHASED AND PROVIDED BY THE OWNER. THE CONTRACTOR SHALL INSTALL ALL EQUIPMENT AND PATCH CORDS/JUMPERS (CAT6 - COPPER / FIBER.)

NOTE #2:
THE CONTRACTOR / VENDOR SHALL MAKE UP AND PROVIDE AN INDUSTRIAL GRADE ELECTRICAL EXTENSION CORD 18" TO 24" IN LENGTH FROM THE TRANSITION NETWORKS POWER SUPPLIES TO THE ELECTRICAL OUTLET/ RECEPTACLE IN EACH IT-COMM. CABINET. THERE SHALL ALSO BE AN ELECTRICAL WIRING HARNESS PLACED BETWEEN THE TRANSITION NETWORKS SWITCHES AND THE TRANSITION NETWORKS POWER SUPPLIES FOR CONNECTION. THE CORDS AND HARNESS SHALL BE ROUTED AND NEATLY SECURED TO THE CABINET BACKBOARD. THE CONTRACTOR SHALL PROVIDE AND INSTALL THE DIN-RAILS IN ALL IT-CABINETS, SQUARE-D PT. #9080M339.

CONTRACTOR/VENDOR NOTE:
THE DATA NETWORK SYSTEM AND RELATED HARDWARE EQUIPMENT, AS INDICATED ON THIS PROJECT ARE FOR THE PURPOSE OF SETTING AN OVERALL DESIGN STANDARD. IT IS THE RESPONSIBILITY OF THE DATA NETWORKING HARDWARE/ SYSTEM CONTRACTOR/ VENDOR TO INSTALL THE HARDWARE EQUIPMENT, AS NOTED IN INSTALL SCHEDULE. THE OWNER SHALL PURCHASE AND PROVIDE ALL DATA NETWORK SWITCHES, POWER SUPPLIES, GBIC MODS, UPS'S/ AND BATTERY UNITS. THE OWNER SHALL SETUP AND PROGRAM THE EQUIPMENT AND TURN OVER TO THE CONTRACTOR FOR INSTALLATION.

DATA NETWORK SYSTEM PROJECT
CONTRACTOR NOTE:
1. The data concerning the Construction of the Comfort Center/ IT- Comm. Building, Entrance Conduits, Station Conduits, HVAC Units, and Electrical Panel, Circuits and Receptacle/Outlet and Ground Bar, Wireless Network Controllers, AV System EQMT, Digital Signage System EQMT, Security Camera System EQMT, LED Lighting Control & Monitoring System, Alarm & Door Access Control System, and the Data Storage EQMT System that are provided on this drawing are for information purposes only.
2. The placement of all these items are being installed under a separate contracts.
3. The Installation of all Network FW/Router EQMT, Network Data Switches (Fiber & Copper), Network Data Servers, KVM Units, UPS/Battery Units, with all Mounts and Mounting Hardware, Power Connections to the equipment, Ground Connections to the equipment, Fiber Patch Cords and the CAT-6 Patch Cords in the IT-Cabinets are the Data Network- Vendor/Contractor's Responsibility. The Network Data Switches and Power Supplies shall be provided by Owner.
4. All Fiber and CAT-6 Patch Cords are under a separate contract. All Patch Cords will be provided to the Vendors/Contractors for installation.

LEGEND

WAP	WAP / WIRELESS ACCESS POINT
	QB / VAULTS 3' X 4' X 3' AND 4' X 6' X 4'
	DEAD / ZONE CAMERA
	IN-LINE CAMERAS
■	POLE MOUNTED IT / COMM CABINET NEMA-4 / 16" X 16" X 6"

CERTIFIED NARTE ENGINEER
REGISTRATION NO. E2-02027
•TERRY S. WEAVER•
BICSI OSP SPECIALIST
RCDD REGISTRATION NO.12777
OSP REGISTRATION NO. 141006
TALA/ Professional Services
1116 20TH STREET SOUTH, SUITE #306
BIRMINGHAM, ALABAMA 35205
PH. (205) 578-1993
www.TALAPro.com
TALA PROJECT NO. TALA-0004 DESIGNER: TSW

REVISIONS			
NO.	DATE	DESCRIPTION	CHKD. APRD.

WALKER ASSOCIATES, INC.
ENGINEERING, PLANNING, GIS & SURVEYING
917 22nd Avenue - Suite B
Tuscaloosa, AL 35401
www.walkercivil.com
P (205) 561-3778 | F (205) 561-3779

PREPARED FOR
TUSCALOOSA CITY WALK PROJECT
FOREST LAKE SECTION
Data Network Hardware / System Project
City of Tuscaloosa
Tuscaloosa, Alabama

APPROVED BY:
REVISIONS: DATE: DESCRIPTION

SCALE: NTS
DRAWING No. TD-03
SHEET No. 4 OF 9
JOB NO: TALA-201401
DESIGNED BY: TSW
DRAWN BY: JWT
CHECKED BY: TSW
DATE: 11/19/2015
DRAWING NAME: TD-03

TUSCALOOSA CITY WALK PROJECT
FOREST LAKE SECTION
PHASE 2 / ITEM #2 COMFORT BUILDING
FLOOR PLAN LAYOUT
DATA NETWORK HARDWARE / SYSTEM PROJECT

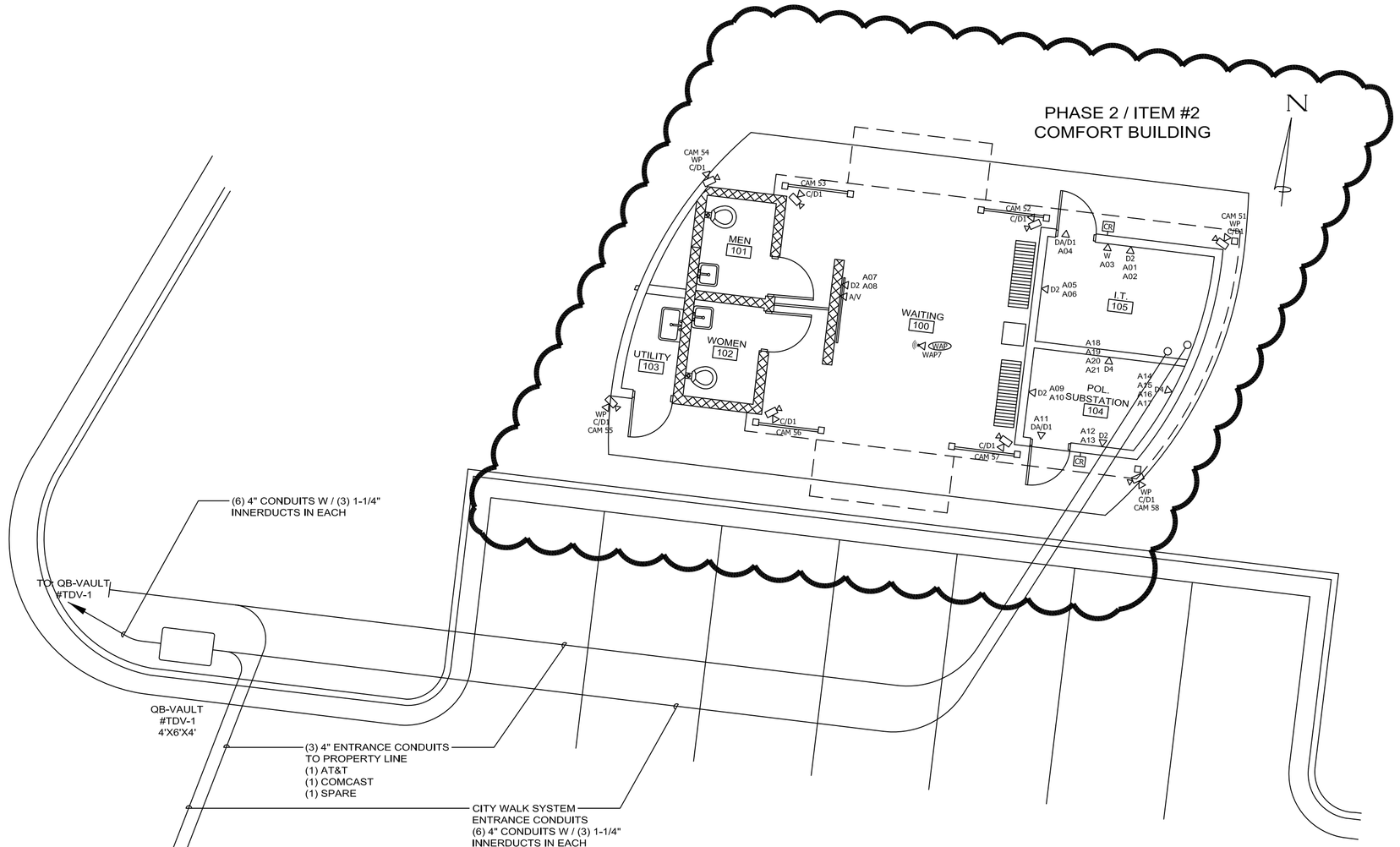

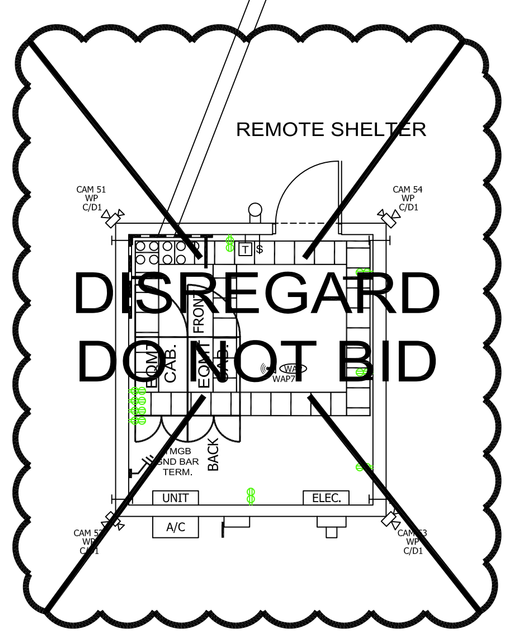

DATA NETWORK SYSTEM PROJECT
CONTRACTOR NOTE:

1. The data concerning the Construction of the Comfort Center/ IT- Comm. Building, Entrance Conduits, Station Conduits, HVAC Units, and Electrical Panel, Circuits and Receptacle/Outlet and Ground Bar, Wireless Network Controllers, AV System EQMT, Digital Signage System EQMT, Security Camera System EQMT, LED Lighting Control & Monitoring System, Alarm & Door Access Control System, and the Data Storage EQMT System that are provided on this drawing are for information purposes only.
2. The placement of all these items are being installed under a separate contracts.
3. The Installation of all Network FW/Router EQMT, Network Data Switches (Fiber & Copper), Network Data Servers, KVM Units, UPS/Battery Units, with all Mounts and Mounting Hardware, Power Connections to the equipment, Ground Connections to the equipment, Fiber Patch Cords and the CAT-6 Patch Cords in the IT-Cabinets are the Data Network- Vendor/Contractor's Responsibility. The Network Data Switches and Power Supplies shall be provided by Owner.
4. All Fiber and CAT-6 Patch Cords are under a separate contract. All Patch Cords will be provided to the Vendors/Contractors for installation.

LEGEND

CR	- CARD READER
◁ A/V	- AUDIO/VISUAL
▽ C/D1	- CAMERA (1) CAT 6 CABLE / BLUE NON-PLN.
▽ WP C/D1	- WEATHER PROOF BOX CAMERA (1) CAT 6 CABLE / BLUE NON-PLN.
◁ W	- WALL PHONE (1) CAT 6 CABLE / BLUE NON-PLENUM
◁ D2	- DATA (2) CAT 6 CABLES / BLUE NON-PLENUM
◁ D4	- DATA (4) CAT 6 CABLES / BLUE NON-PLENUM
WAP	- WIRELESS ACCESS POINT (1) CAT 6 CABLE / BLUE NON-PLENUM
◁ DA/D1	- DOOR ACCESS (1) CAT 6 CABLE / BLUE NON-PLENUM

TUSCALOOSA CITY WALK PROJECT
FOREST LAKE SECTION
DATA NETWORK HARDWARE / SYSTEM PROJECT

PHASE 2 / ITEM #2
IT-COMM. ROOM #105 LAYOUT
COMFORT BUILDING / RESTROOM

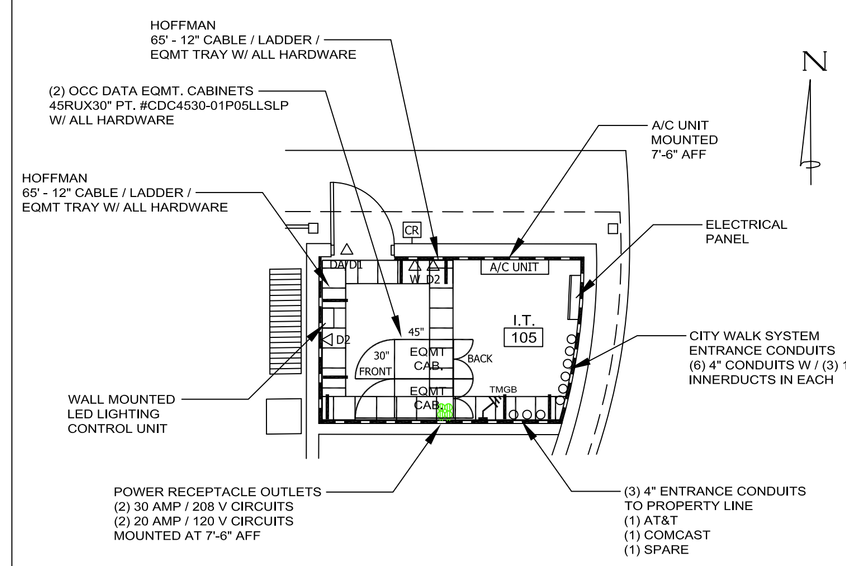

REMOTE COMM. ROOM
SHELTER / BUILDING LAYOUT
(OUTSIDE: 12' X 14' / INSIDE: 10'-7" X 12'-11")

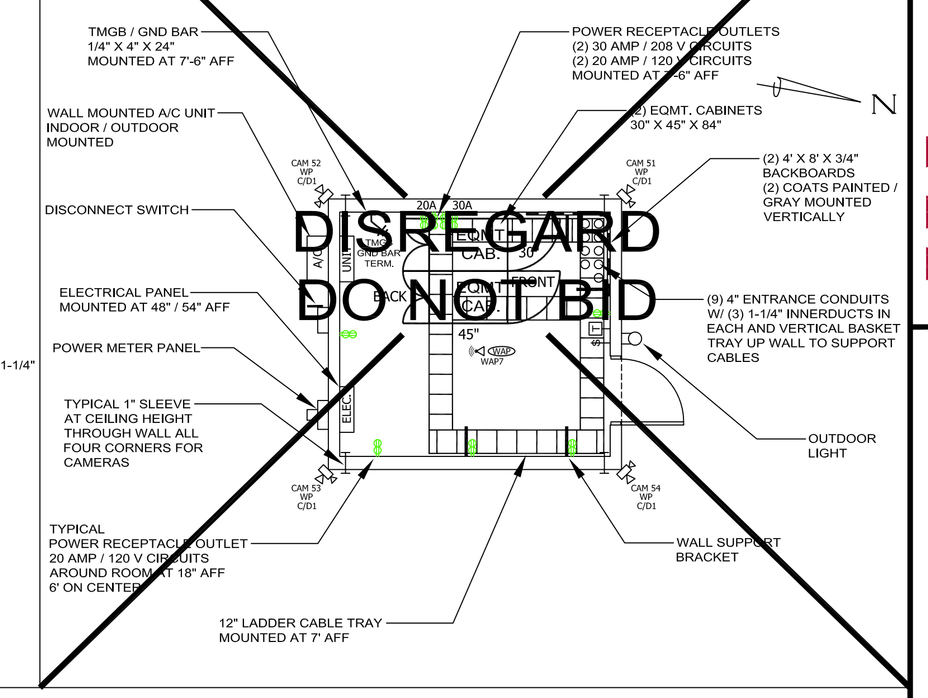

EQUIPMENT CABINET DETAILS
CABINET #C01 & #C02

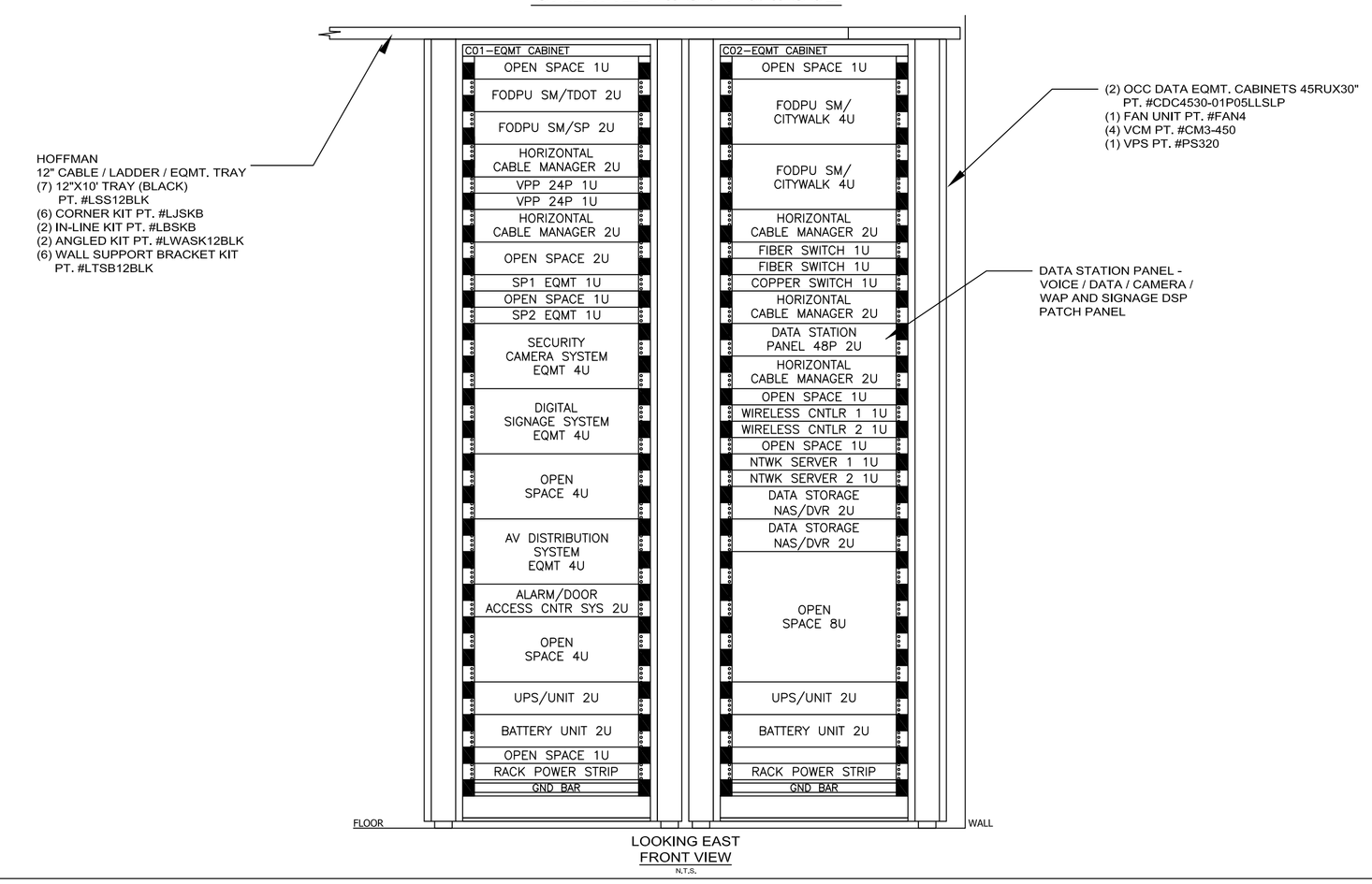

LEGEND

FODPU SM/TDOT 2U (UNDER A SEPARATE CONTRACT)	FIBER OPTIC DISTRIBUTION PANEL UNIT SINGLE-MODE 2U TDOT ENTRANCE FIBER
FODPU SM/SP 2U (UNDER A SEPARATE CONTRACT)	FIBER OPTIC DISTRIBUTION PANEL UNIT SINGLE-MODE 2U SP / SERVICE PROVIDER
FODPU SM 4U CITY WALK (UNDER A SEPARATE CONTRACT)	FIBER OPTIC DISTRIBUTION PANEL UNIT SINGLE-MODE 4U PT. #RTS4U-HD16APB SM ADAPTER PANELS PT. #6124SMQLCHD BLANK ADAPTER PANELS PT. #600HD
HCM 2U (UNDER A SEPARATE CONTRACT)	HORIZONTAL CABLE MANAGER 2U PT. #CM503
VPP 24P (UNDER A SEPARATE CONTRACT)	VOICE PATCH PANEL 24P PT. #DCC2488/110A5E
DSP 48P (UNDER A SEPARATE CONTRACT)	DATA STATION PANEL VOICE/DATA/CAMERA/WAP AND SIGNAGE PATCH PANEL PT. #DCC4888/1105IX
SP1 NTWK EQMT (UNDER A SEPARATE CONTRACT)	SERVICE PROVIDER #1 EQMT
SP1 NTWK EQMT (UNDER A SEPARATE CONTRACT)	SERVICE PROVIDER #2 EQMT
SECURITY CAMERA SYSTEM EQMT PROVIDED BY SECURITY/CAMERA SYSTEM CONTRACTOR	SECURITY CAMERA SYSTEM EQMT
DIGITAL SIGNAGE SYSTEM EQMT PROVIDED BY SECURITY/CAMERA SYSTEM CONTRACTOR	DIGITAL SIGNAGE SYSTEM EQMT
LED LIGHTING CNTLR & MONITORING SYSTEM EQMT PROVIDED BY SECURITY/CAMERA SYSTEM CONTRACTOR	LED LIGHTING CNTRL & MONITORING SYSTEM EQMT
ALARM / DOOR ACCESS CNTLR SYS PROVIDED BY ALARM/DOOR ACCESS CONTRACTOR	ALARM/DOOR ACCESS CNTLR SYSTEM
AV DISTRIBUTION SYSTEM EQMT PROVIDED BY AV DISTRIBUTION SYSTEM CONTRACTOR	AV DISTRIBUTION SYSTEM EQMT
NTWK FIBER SW PROVIDED BY OWNER / INSTALLED BY NETWORK CONTRACTOR	CISCO FIBER SWITCH PT. #WS-C3750X-24S-E W/GBIX MOD'S SFR
NTWK SERVER SW PROVIDED BY OWNER / INSTALLED BY NETWORK CONTRACTOR	CISCO COPPER SWITCH PT. #WS-C3750X-48P-E
WIRELESS CNTLR 1 PROVIDED BY WIRELESS CONTRACTOR	WIRELESS CNTLR #1
WIRELESS CNTLR 2 PROVIDED BY WIRELESS CONTRACTOR	WIRELESS CNTLR #2
UPS UNIT PROVIDED BY OWNER / INSTALLED BY NETWORK CONTRACTOR	EATON UPS UNIT PT. #PW9130L3000R-XL2UN
BATTERY UNIT PROVIDED BY OWNER / INSTALLED BY NETWORK CONTRACTOR	EATON BATTERY UNIT PT. #PW9130N3000R-EBM2U
EQMT. CABINET 45RUX30" (UNDER A SEPARATE CONTRACT)	(1) PT. #CDC4530-01P05LLSLP (1) PT. #FAN4 (1) PT. #CM503 (1) PT. #CM3-450 (1) PT. #P3520
GND BAR (UNDER A SEPARATE CONTRACT)	GROUND BAR PT. #GRD19
POWER STRIP 20A (UNDER A SEPARATE CONTRACT)	POWER STRIP 20A PT. #PS120
100 PR 110 BLK (UNDER A SEPARATE CONTRACT)	100 PAIR 110 BLOCK PT. #DCC 100/110EFSLK W/PT. #COH110L

WALKER ASSOCIATES, INC.
ENGINEERING, PLANNING, GIS & SURVEYING
917 22nd Avenue - Suite B
Tuscaloosa, AL 35401
www.walkercivil.com
P (205) 561-3778 | F (205) 561-3779

PREPARED FOR

TUSCALOOSA CITY WALK PROJECT
FOREST LAKE SECTION
Data Network Hardware / System
City of Tuscaloosa
Tuscaloosa, Alabama

APPROVED BY:

REVISIONS:

DATE:	DESCRIPTION

SCALE: NTS
DRAWING No. TD-04
SHEET No. 5 OF 9

JOB No: TALA-201401

DESIGNED BY: TSW
DRAWN BY: JWT
CHECKED BY: TSW
DATE: 11/19/2015
DRAWING NAME: TD-04

CERTIFIED NARTE ENGINEER
REGISTRATION NO. E2-02027
HERRY S. WEAVER
REGISTERED COMMUNICATIONS DISTRIBUTION DESIGNER
BICSI
RCDD REGISTRATION NO.12777
DSP REGISTRATION NO. 141086
DSP SPECIALIST
TALA/ Professional Services
1116 20TH STREET SOUTH, SUITE #306
BIRMINGHAM, ALABAMA 35205
PH. (205) 578-1993
www.TALAPro.com

TALA PROJECT NO. TALA-0004 | DESIGNER: TSW

REVISIONS

NO.	DATE	DESCRIPTION	CHKD. APRD.

TUSCALOOSA CITY WALK PROJECT
FOREST LAKE SECTION
PHASE 1 / ITEM #1 - BASE BID
(TEMPORARY LOCATION)
UNIVERSITY PLACE SCHOOL FIBER RISER SYSTEM
DATA NETWORK HARDWARE / SYSTEM PROJECT

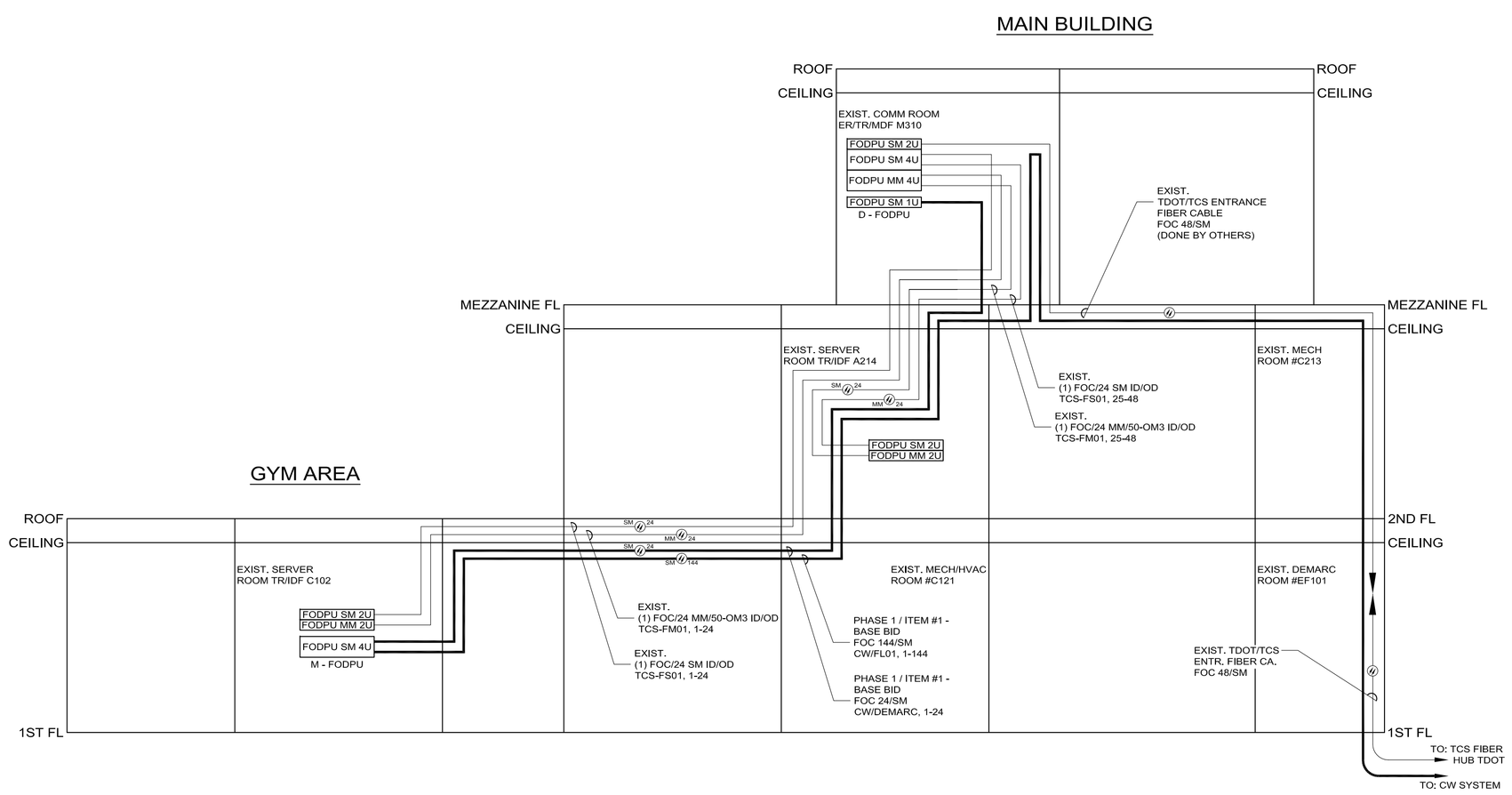

DATA NETWORK SYSTEM PROJECT
CONTRACTOR NOTE:

1. The data concerning the Construction of the Comfort Center/ IT- Comm. Building, Entrance Conduits, Station Conduits, HVAC Units, and Electrical Panel, Circuits and Receptacle/Outlet and Ground Bar, Wireless Network Controllers, AV System EQMT, Digital Signage System EQMT, Security Camera System EQMT, LED Lighting Control & Monitoring System, Alarm & Door Access Control System, and the Data Storage EQMT System that are provided on this drawing are for information purposes only.
2. The placement of all these items are being installed under a separate contracts.
3. The Installation of all Network FW/Router EQMT, Network Data Switches (Fiber & Copper), Network Data Servers, KVM Units, UPS/Battery Units, with all Mounts and Mounting Hardware, Power Connections to the equipment, Ground Connections to the equipment, Fiber Patch Cords and the CAT-6 Patch Cords in the IT-Cabinets are the Data Network- Vendor/Contractor's Responsibility. The Network Data Switches and Power Supplies shall be provided by Owner.
4. All Fiber and CAT-6 Patch Cords are under a separate contract. All Patch Cords will be provided to the Vendors/Contractors for installation.

LEGEND

CR	- CARD READER
A/V	- AUDIO/VISUAL
C/D1	- CAMERA (1) CAT 6 CABLE / BLUE NON-PLN.
WP C/D1	- WEATHER PROOF BOX CAMERA (1) CAT 6 CABLE / BLUE NON-PLN.
W	- WALL PHONE (1) CAT 6 CABLE / BLUE NON-PLENUM
D2	- DATA (2) CAT 6 CABLES / BLUE NON-PLENUM
D4	- DATA (4) CAT 6 CABLES / BLUE NON-PLENUM
WAP	- WIRELESS ACCESS POINT (1) CAT 6 CABLE / BLUE NON-PLENUM
DA/D1	- DOOR ACCESS (1) CAT 6 CABLE / BLUE NON-PLENUM

TUSCALOOSA CITY WALK PROJECT
FOREST LAKE SECTION
DATA NETWORK HARDWARE / SYSTEM PROJECT

PHASE 1 / ITEM #1 - BASE BID
(TEMPORARY LOCATION)
UNIVERSITY PLACE SCHOOL
TR/IDF-C102 COMM. ROOM

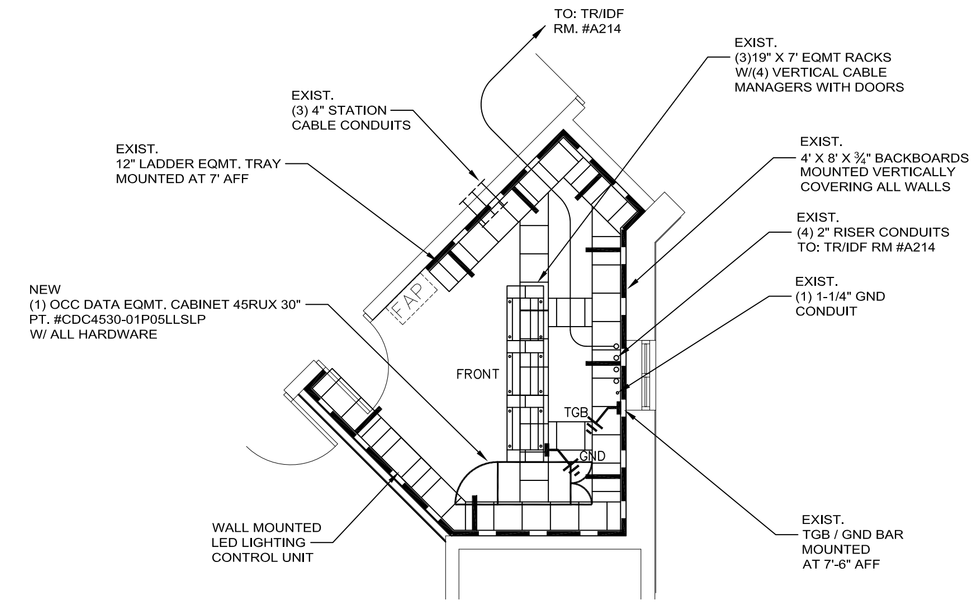

TEMPORARY
EQUIPMENT CABINET DETAIL
CABINET #C01

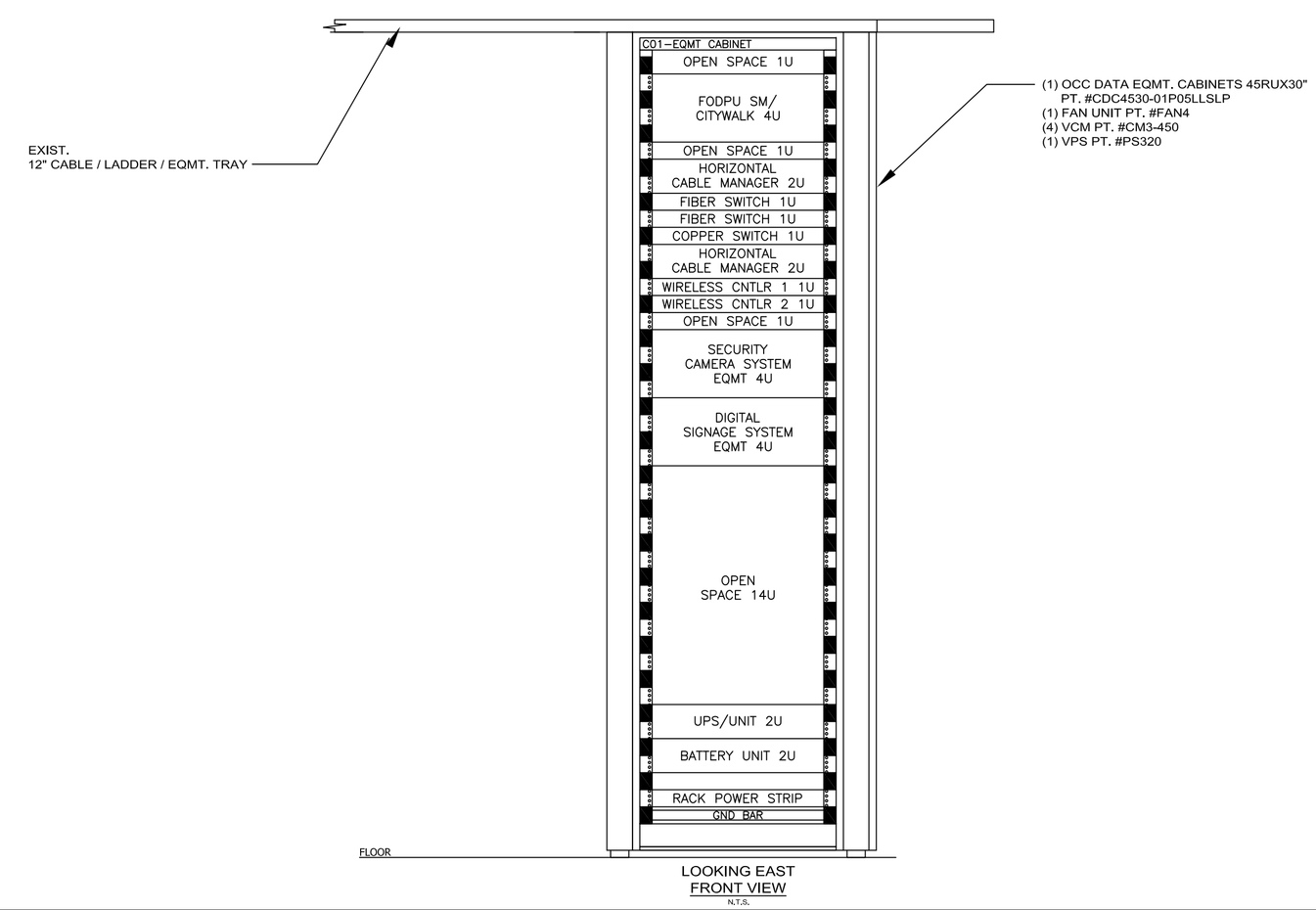

LEGEND

FODPU SM/TDOT 2U (UNDER A SEPARATE CONTRACT)	FIBER OPTIC DISTRIBUTION PANEL UNIT SINGLE-MODE 2U TDOT ENTRANCE FIBER
FODPU SM/SP 2U (UNDER A SEPARATE CONTRACT)	FIBER OPTIC DISTRIBUTION PANEL UNIT SINGLE-MODE 2U SP / SERVICE PROVIDER
FODPU SM 4U CITY WALK (UNDER A SEPARATE CONTRACT)	FIBER OPTIC DISTRIBUTION PANEL UNIT SINGLE-MODE 4U PT. #RTS4U-HD16APB SM ADAPTER PANELS PT. #6124SMOLCHD BLANK ADAPTER PANELS PT. #600HD
HCM 2U (UNDER A SEPARATE CONTRACT)	HORIZONTAL CABLE MANAGER 2U PT. #CM503
VPP 24P (UNDER A SEPARATE CONTRACT)	VOICE PATCH PANEL 24P PT. #DCC2488/110A5E
DSP 48P (UNDER A SEPARATE CONTRACT)	DATA STATION PANEL VOICE/DATA/CAMERA/WAP AND SIGNAGE PATCH PANEL PT. #DCC4888/1105IX
SP1 NTWK EQMT (UNDER A SEPARATE CONTRACT)	SERVICE PROVIDER #1 EQMT
SP1 NTWK EQMT (UNDER A SEPARATE CONTRACT)	SERVICE PROVIDER #2 EQMT
SECURITY CAMERA SYSTEM EQMT PROVIDED BY SECURITY/CAMERA SYSTEM CONTRACTOR	SECURITY CAMERA SYSTEM EQMT
DIGITAL SIGNAGE SYSTEM EQMT PROVIDED BY SECURITY/CAMERA SYSTEM CONTRACTOR	DIGITAL SIGNAGE SYSTEM EQMT
LED LIGHTING CNTLR & MONITORING SYSTEM EQMT PROVIDED BY SECURITY/CAMERA SYSTEM CONTRACTOR	LED LIGHTING CNTRL & MONITORING SYSTEM EQMT
ALARM / DOOR ACCESS CNTLR SYS PROVIDED BY ALARM/DOOR ACCESS CONTRACTOR	ALARM/DOOR ACCESS CNTLR SYSTEM
AV DISTRIBUTION SYSTEM EQMT PROVIDED BY AV DISTRIBUTION SYSTEM CONTRACTOR	AV DISTRIBUTION SYSTEM EQMT
NTWK FIBER SW PROVIDED BY OWNER / INSTALLED BY NETWORK CONTRACTOR	CISCO FIBER SWITCH PT. #WS-C3750X-24S-E W/GBIX MOD'S SFR
NTWK SERVER SW PROVIDED BY OWNER / INSTALLED BY NETWORK CONTRACTOR	CISCO COPPER SWITCH PT. #WS-C3750X-48P-E
WIRELESS CNTLR 1 PROVIDED BY WIRELESS CONTRACTOR	WIRELESS CNTLR #1
WIRELESS CNTLR 2 PROVIDED BY WIRELESS CONTRACTOR	WIRELESS CNTLR #2
UPS UNIT PROVIDED BY OWNER / INSTALLED BY NETWORK CONTRACTOR	EATON UPS UNIT PT. #PW9130L3000R-XL2UN
BATTERY UNIT PROVIDED BY OWNER / INSTALLED BY NETWORK CONTRACTOR	EATON BATTERY UNIT PT. #PW9130N3000R-EBM2U
EQMT. CABINET 45RUX30" (UNDER A SEPARATE CONTRACT)	(1) PT. #CDC4530-01P05LLSLP (1) PT. #FAN4 (1) PT. #CM503 (1) PT. #CM3-450 (1) PT. #P3520
GND BAR (UNDER A SEPARATE CONTRACT)	GROUND BAR PT. #GRD19
POWER STRIP 20A (UNDER A SEPARATE CONTRACT)	POWER STRIP 20A PT. #PS120
100 PR 110 BLK (UNDER A SEPARATE CONTRACT)	100 PAIR 110 BLOCK PT. #DCC 100/110EFSLK W/PT. #COH110L

WALKER ASSOCIATES, INC.
ENGINEERING, PLANNING, GIS & SURVEYING
917 22nd Avenue - Suite B
Tuscaloosa, AL 35401
www.walkercivil.com
P (205) 561-3778 | F (205) 561-3779

PREPARED FOR:
TUSCALOOSA CITY WALK PROJECT
FOREST LAKE SECTION
Data Network Hardware / System
City of Tuscaloosa
Tuscaloosa, Alabama

APPROVED BY:

REVISIONS:

DATE:	DESCRIPTION

SCALE: NTS
DRAWING No. TD-04.1
SHEET No. 5.1 OF 9

JOB NO: TALA-201401

DESIGNED BY: TSW
DRAWN BY: JWT
CHECKED BY: TSW
DATE: 11/19/2015
DRAWING NAME: TD-04.1

CERTIFIED NARTE ENGINEER
REGISTRATION NO. E2-62027
BICSI RECOGNIZED COMMUNICATIONS DISTRIBUTION DESIGNER
OSP SPECIALIST
RCDD REGISTRATION NO.12277
OSP REGISTRATION NO. 141086
TERRY S. WEAVER
TALA/ Professional Services
1116 20TH STREET SOUTH, SUITE #306
BIRMINGHAM, ALABAMA 35205
PH. (205) 578-1993
www.TALAPro.com

TALA PROJECT NO. TALA-0004 | DESIGNER: TSW

REVISIONS

NO.	DATE	DESCRIPTION	CHKD.	APRD.

TUSCALOOSA CITY WALK PROJECT
IT / COMM. POLE MOUNT CABINET / BOX
TYPICAL DETAIL 16" X 16" X 8"
DATA NETWORK HARDWARE / SYSTEM PROJECT

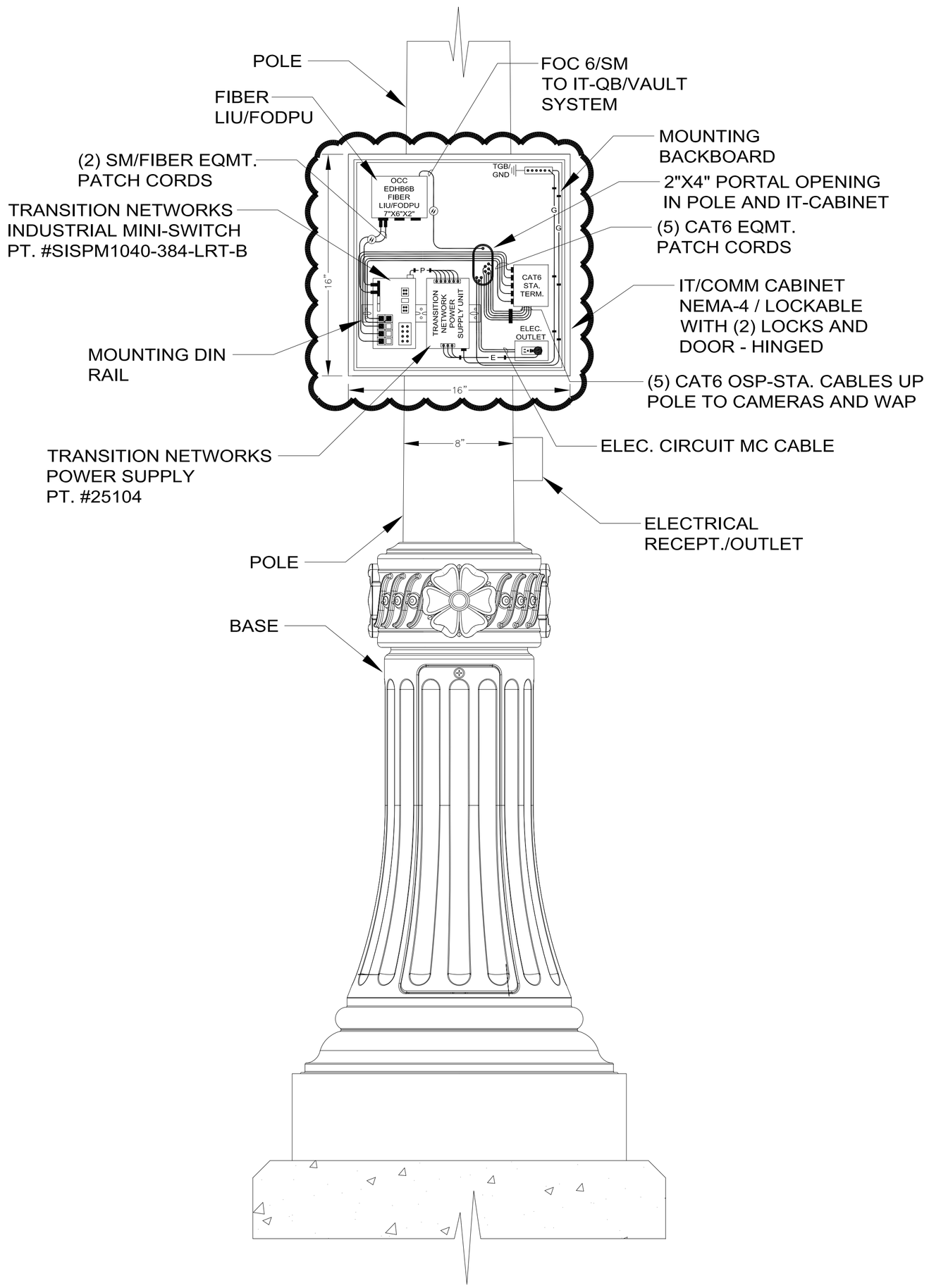

INSIDE VIEW
(FRONT)

DATA NETWORK HARDWARE / SYSTEM PROJECT
CONTRACTOR NOTE:

1. The data concerning the IT-Cabinet w/all hardware, NEMA J-Box, Seal-tight conduit connections to the NEMA J-Box, Fiber and LIU/FODPU, CAT-6 Station Cable and Termination Box, and the Electrical Receptacle/Outlet and Ground Bar that are provided on this drawing are for information purposes only.
2. The placement of all these items are being installed under a separate contract.
3. The Installation of all Network Data Switches and Power Supplies with all Mounts and Mounting Hardware/Din Rail, Power Connections to the equipment, Ground Connections to the equipment, Fiber Patch Cords and the CAT-6 Patch Cords in the IT-Cabinet are the Data Network - Vendor/Contractor's Responsibility. The Network Data Switches and Power Supplies shall be provided by Owner.
4. All Fiber and CAT-6 Patch Cords are under a separate contract. All Patch Cords will be provided to the Vendors/Contractors for installation.

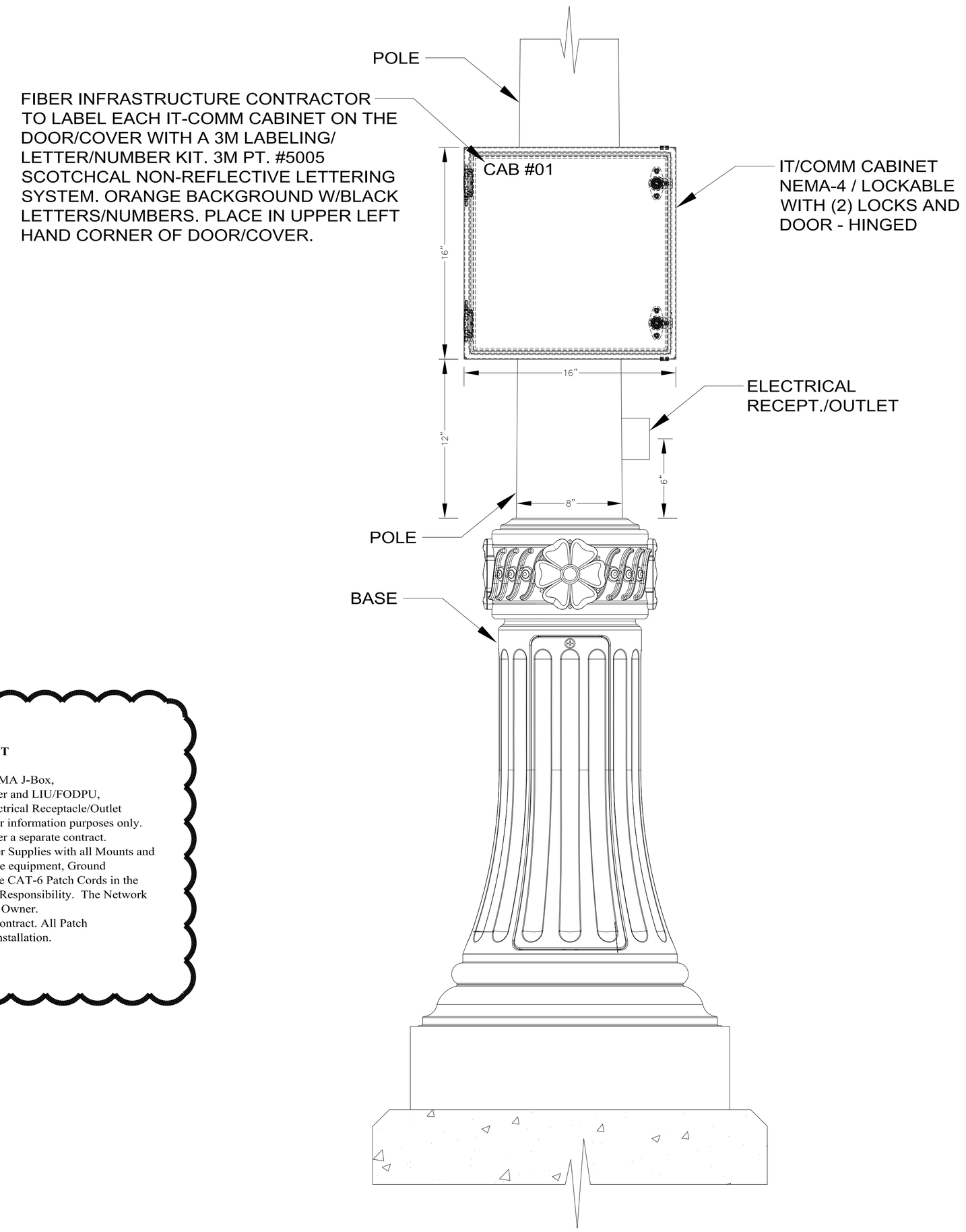

OUTSIDE VIEW
(FRONT)

WALKER ASSOCIATES, INC.
ENGINEERING, PLANNING, GIS & SURVEYING
917 22nd Avenue - Suite B
Tuscaloosa, AL 35401
www.walkercivil.com
P (205) 561-3778 | F (205) 561-3779

PREPARED FOR:
TUSCALOOSA CITY WALK PROJECT
FOREST LAKE SECTION
Data Network Hardware / System
City of Tuscaloosa
Tuscaloosa, Alabama

APPROVED BY:

REVISIONS:

DATE:	DESCRIPTION

SCALE: NTS
DRAWING No. TD-05
SHEET No. 6 OF 9

JOB NO: TALA-201401

DESIGNED BY: TSW
DRAWN BY: JWT
CHECKED BY: TSW
DATE: 11/19/2015
DRAWING NAME: TD-05

CERTIFIED NARTE ENGINEER
REGISTRATION NO. E2-62027
BICSI OSP SPECIALIST
RCDD REGISTRATION NO.12777
OSP REGISTRATION NO. 141086
•TERRY S. WEAVER•
TALA/ Professional Services
1116 20TH STREET SOUTH, SUITE #306
BIRMINGHAM, ALABAMA 35205
PH. (205) 578-1993
www.TALAPro.com

TALA PROJECT NO. TALA-0004 | DESIGNER: TSW

REVISIONS

NO.	DATE	DESCRIPTION	CHKD. APRD.

TUSCALOOSA CITY WALK PROJECT
TYPICAL POLE DETAILS - "A"
DATA NETWORK HARDWARE / SYSTEM PROJECT

NOTES:

1. LIGHT POLES, LIGHT FIXTURE, LIGHT FIXTURE ARMS, ARM CASTINGS, DECORATIVE POLE BASE COVERS, ANCHOR BOLTS, AND ALL ASSOCIATED APPURTENANCES ARE SUPPLIED BY THE CITY. DETAILS AND DIAGRAMS SHOWN ARE FOR REFERENCE ONLY AND SUBJECT TO CHANGE. ALL SHALL BE INSTALLED BY THE CONTRACTOR IN THIS PROJECT.
2. IT SHALL BE THE CONTRACTOR'S RESPONSIBILITY OF COORDINATING THE INSTALLATION OF THE POLE BASE WITH ALL OTHER UNDERGROUND UTILITIES, INCLUDING BUT NOT LIMITED TO, ELECTRICAL DUCT BANKS, CONDUITS FOR SITE LIGHTING, IRRIGATION, WATER MAINS, ETC. CONTRACTOR SHALL BE RESPONSIBLE FOR ENSURING SUCH UNDERGROUND UTILITIES ARE INSTALLED IN SUCH A MANNER TO NOT INTERFERE WITH POLE BASE INSTALLATION OR LOCATIONS. ANY NECESSARY MODIFICATIONS TO POLE BASES OR UNDERGROUND UTILITIES INSTALLED BY THE CONTRACTOR SHALL BE AT THE COSTS OF THE CONTRACTOR.
3. MINIMUM CONCRETE COMPRESSIVE STRENGTH = 3000 PSI @ 28 DAYS.
4. POLE BASE TO BE CAST AGAINST UNDISTURBED EARTHEN MATERIAL.
5. REINFORCING STEEL TO MEET ASTM A615 GRADE 60 REQUIREMENTS.
6. INSTALLATION OF FOUNDATIONS BY OTHERS.
7. DESIGN OF FOUNDATIONS TO BE PREPARED BY REGISTERED ENGINEER AS A PART OF EACH CITY WALK PROJECT.

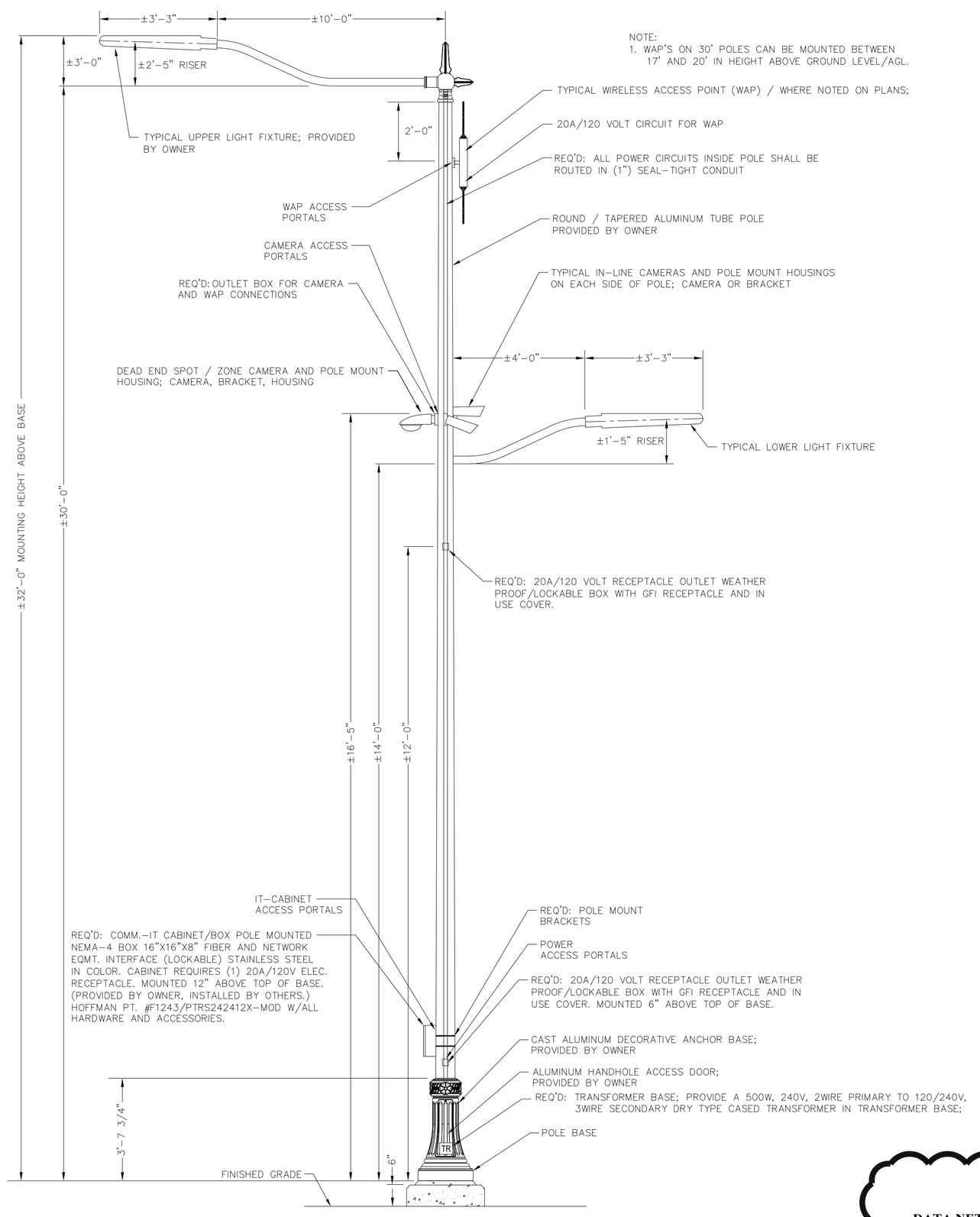

DETAIL
30' POLE (ALUMINUM, ROUND / TAPERED)
STREET / PEDESTRIAN LIGHT POLE ASSEMBLY
N.T.S.

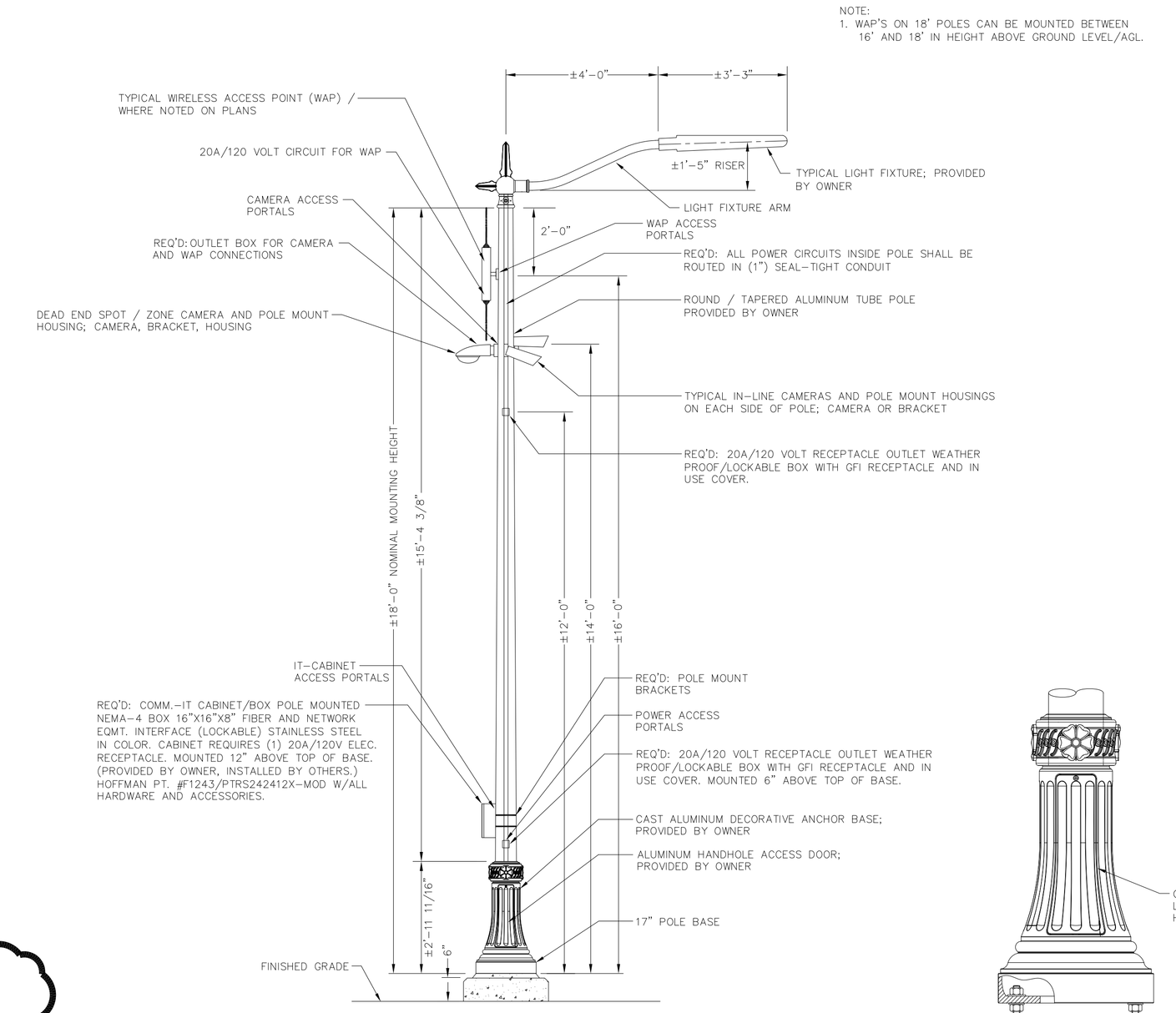

DETAIL
18' POLE (ALUMINUM, ROUND / TAPERED)
STREET / PEDESTRIAN LIGHT POLE ASSEMBLY
N.T.S.

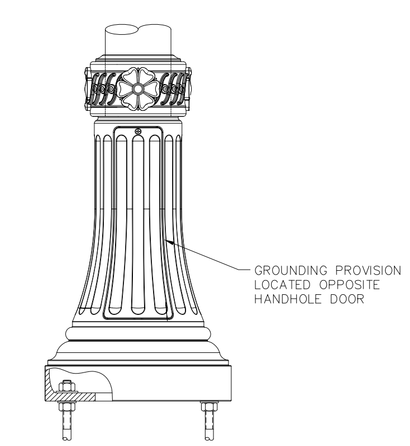

BASE DETAIL
N.T.S.

DATA NETWORK HARDWARE / SYSTEM PROJECT
CONTRACTOR NOTE:

1. The data concerning the IT-Cabinet w/all hardware, NEMA J-Box, Seal-tight conduit connections to the NEMA J-Box, Fiber and LIU/FODPU, CAT-6 Station Cable and Termination Box, and the Electrical Receptacle/Outlet and Ground Bar that are provided on this drawing are for information purposes only.
2. The placement of all these items are being installed under a separate contract.
3. The Installation of all Network Data Switches and Power Supplies with all Mounts and Mounting Hardware/Din Rail, Power Connections to the equipment, Ground Connections to the equipment, Fiber Patch Cords and the CAT-6 Patch Cords in the IT-Cabinet are the Data Network - Vendor/Contractor's Responsibility. The Network Data Switches and Power Supplies shall be provided by Owner.
4. All Fiber and CAT-6 Patch Cords are under a separate contract. All Patch Cords will be provided to the Vendors/Contractors for installation.

WALKER ASSOCIATES, INC.
ENGINEERING, PLANNING, GIS & SURVEYING
917 22nd Avenue - Suite B
Tuscaloosa, AL 35401
www.walkercivil.com
P (205) 561-3778 | F (205) 561-3779

PREPARED FOR:
TUSCALOOSA CITY WALK PROJECT
FOREST LAKE SECTION
Data Network Hardware / System
City of Tuscaloosa
Tuscaloosa, Alabama

APPROVED BY:

REVISIONS:

DATE:	DESCRIPTION

SCALE: NTS
DRAWING No. TD-06
SHEET No. 7 OF 9

JOB NO: TALA-201401

DESIGNED BY: TSW
DRAWN BY: JWT
CHECKED BY: TSW
DATE: 11/19/2015
DRAWING NAME: TD-06

CERTIFIED NARTE ENGINEER
REGISTRATION NO. E2-02027
TERRY S. WEAVER
BICSI OSP SPECIALIST
RCDD REGISTRATION NO.12777
OSP REGISTRATION NO. 141086
TALA/ Professional Services
1116 20TH STREET SOUTH, SUITE #306
BIRMINGHAM, ALABAMA 35205
PH. (205) 578-1993
www.TALAPro.com
TALA PROJECT NO. TALA-0004 | DESIGNER: TSW

REVISIONS

NO.	DATE	DESCRIPTION	CHKD. APRD.

TUSCALOOSA CITY WALK PROJECT
TYPICAL POLE DETAILS - "B"
DATA NETWORK HARDWARE / SYSTEM PROJECT

NOTES:

1. LIGHT POLES, LIGHT FIXTURE, LIGHT FIXTURE ARMS, ARM CASTINGS, DECORATIVE POLE BASE COVERS, ANCHOR BOLTS, AND ALL ASSOCIATED APPURTENANCES ARE SUPPLIED BY THE CITY. DETAILS AND DIAGRAMS SHOWN ARE FOR REFERENCE ONLY AND SUBJECT TO CHANGE. ALL SHALL BE INSTALLED BY THE CONTRACTOR IN THIS PROJECT.
2. IT SHALL BE THE CONTRACTOR'S RESPONSIBILITY OF COORDINATING THE INSTALLATION OF THE POLE BASE WITH ALL OTHER UNDERGROUND UTILITIES, INCLUDING BUT NOT LIMITED TO, ELECTRICAL DUCT BANKS, CONDUITS FOR SITE LIGHTING, IRRIGATION, WATER MAINS, ETC. CONTRACTOR SHALL BE RESPONSIBLE FOR ENSURING SUCH UNDERGROUND UTILITIES ARE INSTALLED IN SUCH A MANNER TO NOT INTERFERE WITH POLE BASE INSTALLATION OR LOCATIONS. ANY NECESSARY MODIFICATIONS TO POLE BASES OR UNDERGROUND UTILITIES INSTALLED BY THE CONTRACTOR SHALL BE AT THE COSTS OF THE CONTRACTOR.
3. MINIMUM CONCRETE COMPRESSIVE STRENGTH = 3000 PSI @ 28 DAYS.
4. POLE BASE TO BE CAST AGAINST UNDISTURBED EARTHEN MATERIAL.
5. REINFORCING STEEL TO MEET ASTM A615 GRADE 60 REQUIREMENTS.
6. INSTALLATION OF FOUNDATIONS BY OTHERS.
7. DESIGN OF FOUNDATIONS TO BE PREPARED BY REGISTERED ENGINEER AS A PART OF EACH CITY WALK PROJECT.

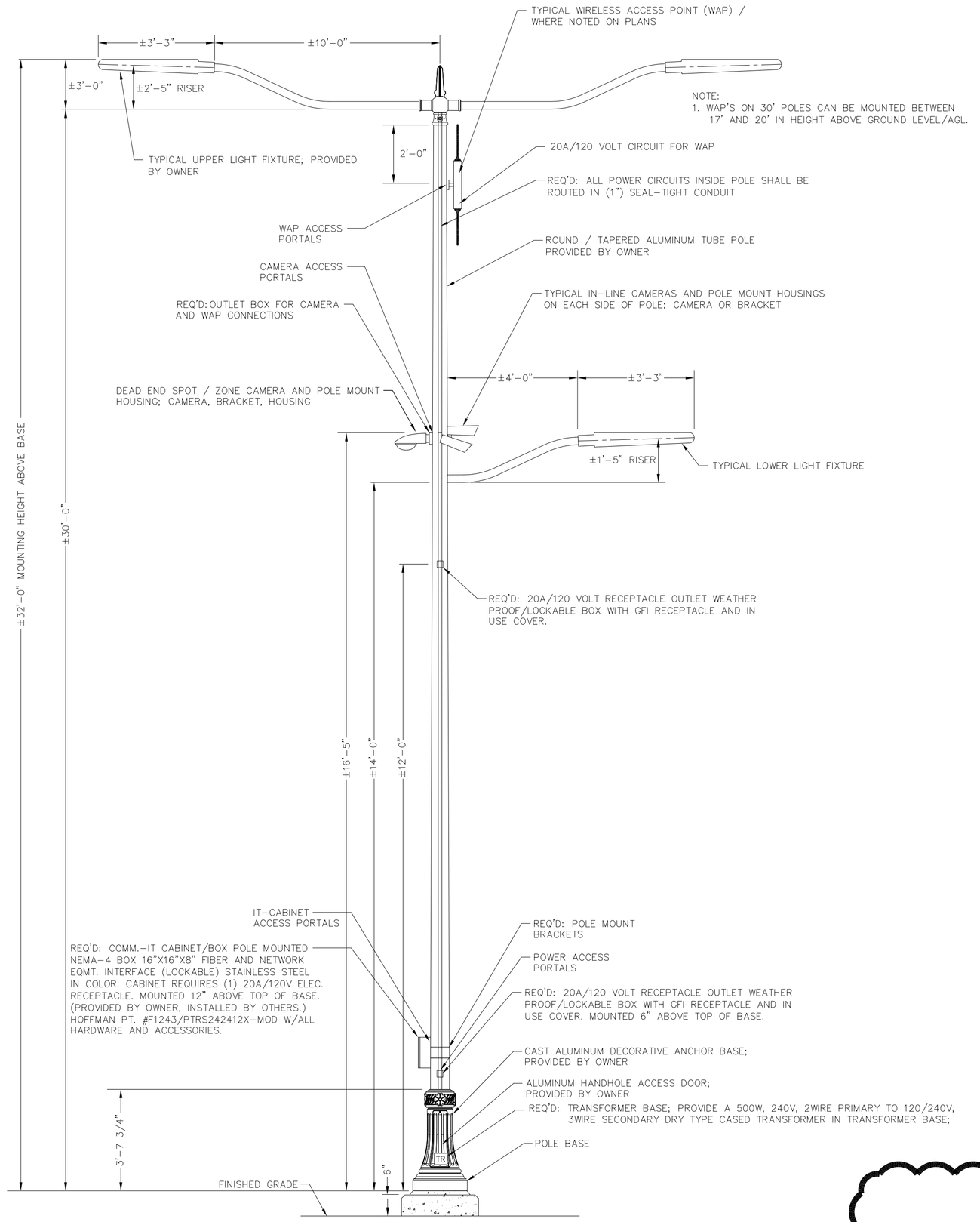

DETAIL
30' POLE (ALUMINUM, ROUND / TAPERED)
STREET / PEDESTRIAN LIGHT POLE ASSEMBLY
N.T.S.

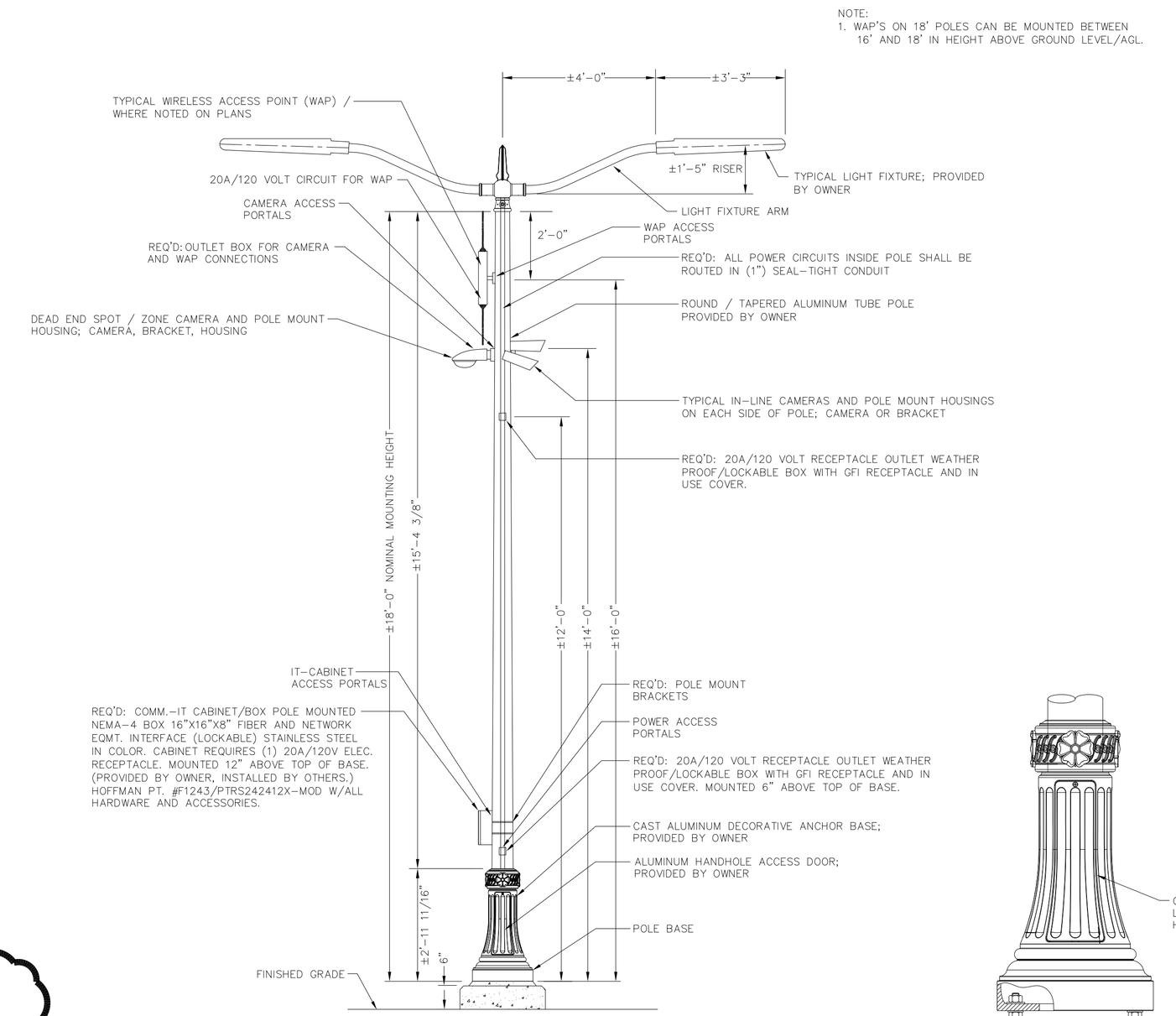

DETAIL
18' POLE (ALUMINUM, ROUND / TAPERED)
PARKING LOT / LIGHT POLE ASSEMBLY
N.T.S.

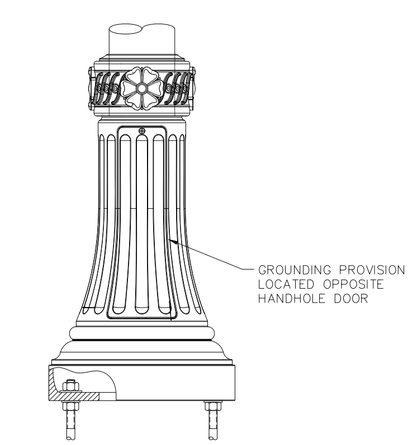

BASE DETAIL
N.T.S.

DATA NETWORK HARDWARE / SYSTEM PROJECT
CONTRACTOR NOTE:

1. The data concerning the IT-Cabinet w/all hardware, NEMA J-Box, Seal-tight conduit connections to the NEMA J-Box, Fiber and LIU/FODPU, CAT-6 Station Cable and Termination Box, and the Electrical Receptacle/Outlet and Ground Bar that are provided on this drawing are for information purposes only.
2. The placement of all these items are being installed under a separate contract.
3. The Installation of all Network Data Switches and Power Supplies with all Mounts and Mounting Hardware/Din Rail, Power Connections to the equipment, Ground Connections to the equipment, Fiber Patch Cords and the CAT-6 Patch Cords in the IT-Cabinet are the Data Network - Vendor/Contractor's Responsibility. The Network Data Switches and Power Supplies shall be provided by Owner.
4. All Fiber and CAT-6 Patch Cords are under a separate contract. All Patch Cords will be provided to the Vendors/Contractors for installation.

WALKER ASSOCIATES, INC.
ENGINEERING, PLANNING, GIS & SURVEYING
917 22nd Avenue - Suite B
Tuscaloosa, AL 35401
www.walkercivil.com
P (205) 561-3778 | F (205) 561-3779

PREPARED FOR:
TUSCALOOSA CITY WALK PROJECT
FOREST LAKE SECTION
Data Network Hardware / System
City of Tuscaloosa
Tuscaloosa, Alabama

APPROVED BY:

REVISIONS:

DATE:	DESCRIPTION

SCALE: NTS
DRAWING No. TD-07
SHEET No. 8 OF 9

JOB NO: TALA-201401

DESIGNED BY: TSW
DRAWN BY: JWT
CHECKED BY: TSW
DATE: 11/19/2015
DRAWING NAME: TD-07

CERTIFIED NARTE ENGINEER
REGISTRATION NO. E2-02027
REGISTERED COMMUNICATIONS DISTRIBUTION DESIGNER BICSI
OSP SPECIALIST
RCDD REGISTRATION NO.12777
OSP REGISTRATION NO. 141086
TERRY S. WEAVER
TALA/ Professional Services
1116 20TH STREET SOUTH, SUITE #306
BIRMINGHAM, ALABAMA 35205
PH. (205) 578-1993
www.TALAPro.com

TALA PROJECT NO. TALA-6004 | DESIGNER: TSW

REVISIONS

NO.	DATE	DESCRIPTION	CHKD. APRD.

TUSCALOOSA CITY WALK PROJECT
TYPICAL POLE PORTALS OPENING / NEMA BOX / CAMERA / WAP DETAILS
DATA NETWORK HARDWARE / SYSTEM PROJECT

DETAIL - "A"
PORTAL OPENING

N.T.S.

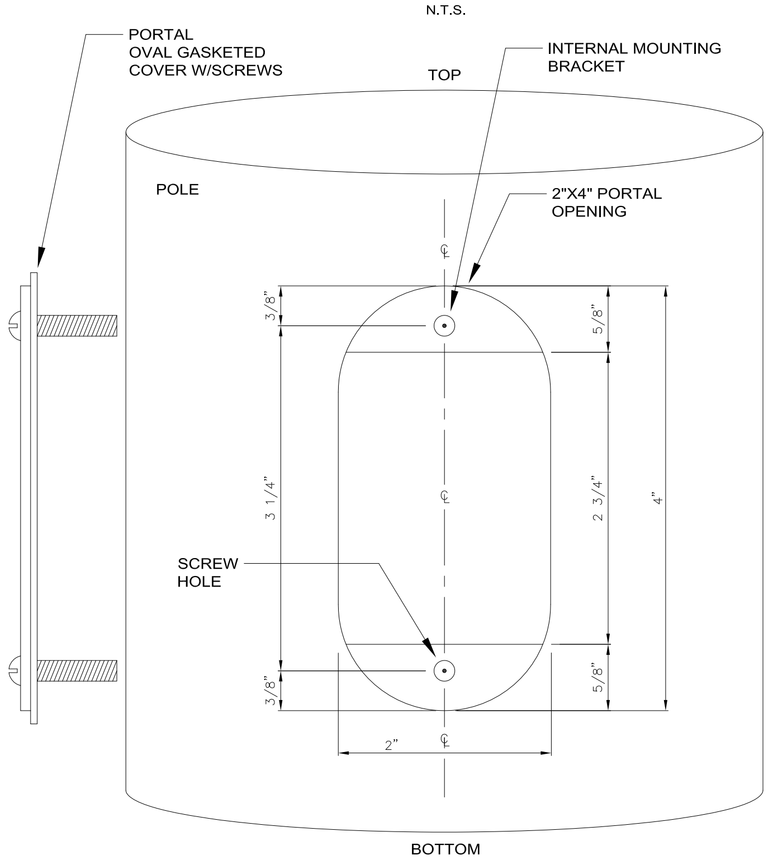

DETAIL - "B"
NEMA 4X - 5" X 5" X 3"
(BLACK) W/GASKETED COVER

N.T.S.

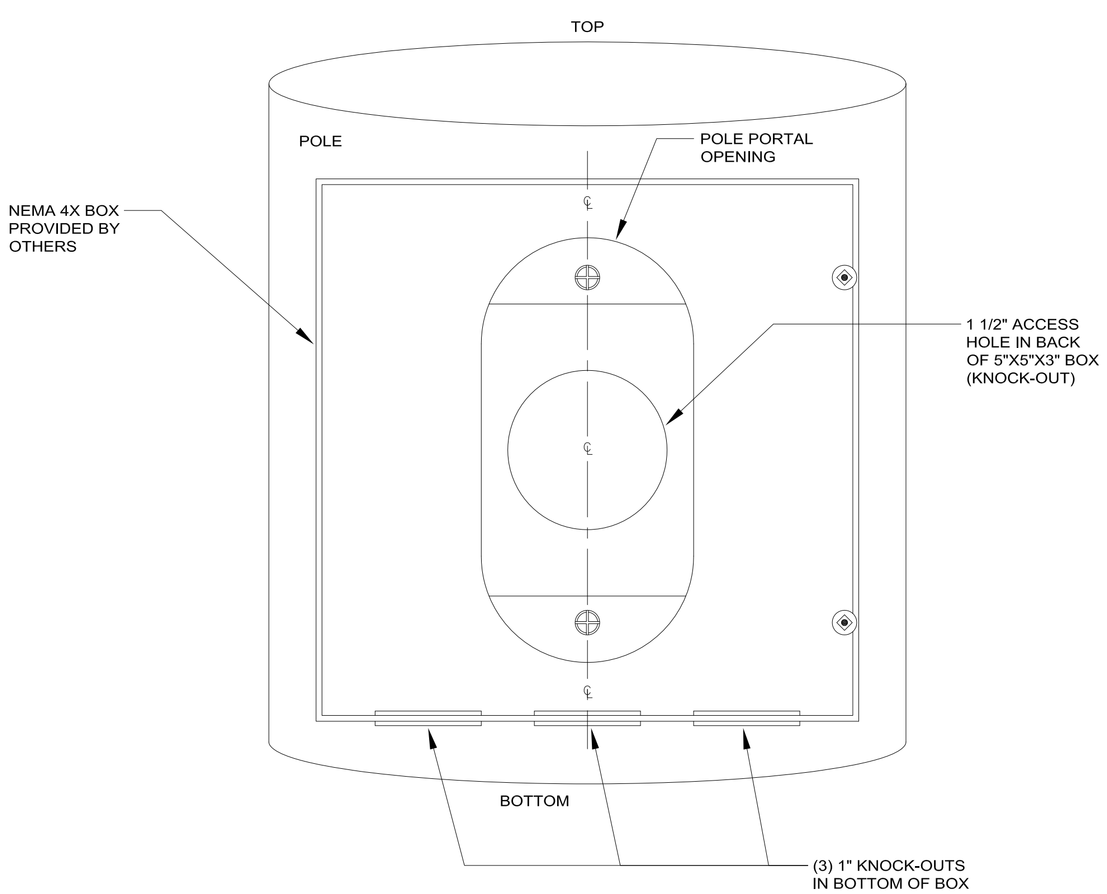

DETAIL - "C"
NEMA 4X - 5"X5"X3" BOX W/ SEAL-TIGHT (BLACK) CONDUITS FOR CONNECTIONS TO WAP

N.T.S.

NOTE:
1. WAP'S ON 18' POLES CAN BE MOUNTED BETWEEN 16' AND 18' IN HEIGHT ABOVE GROUND LEVEL/AGL.
2. WAP'S ON 30' POLES CAN BE MOUNTED BETWEEN 17' AND 20' IN HEIGHT ABOVE GROUND LEVEL/AGL.

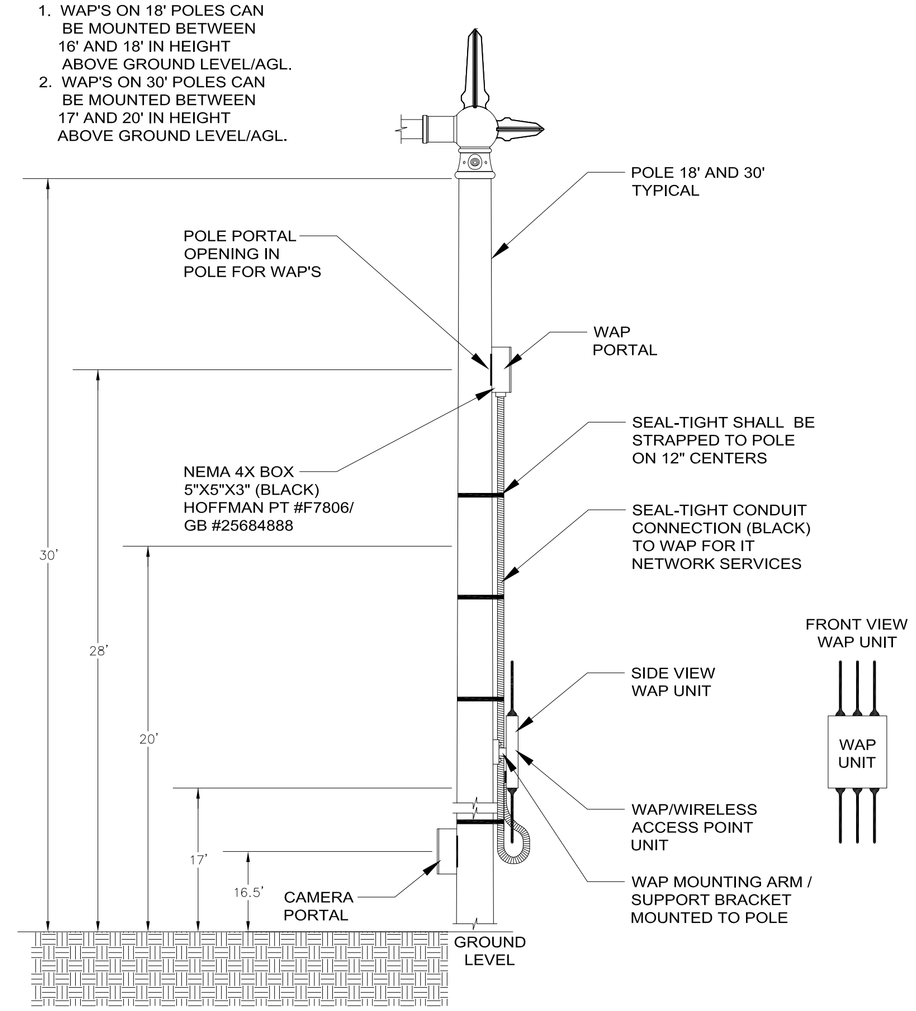

DETAIL - "D"
NEMA 4X - 5"X5"X3" BOX W/ SEAL-TIGHT (BLACK) CONDUITS FOR CONNECTIONS TO CAMERAS

N.T.S.

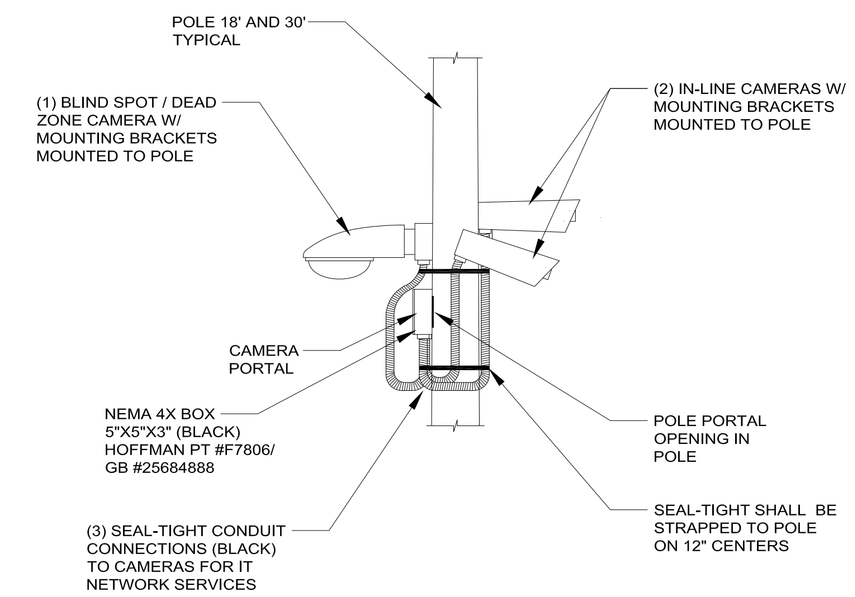

DATA NETWORK HARDWARE / SYSTEM PROJECT
CONTRACTOR NOTE:

1. The data concerning the IT-Cabinet w/all hardware, NEMA J-Box, Seal-tight conduit connections to the NEMA J-Box, Fiber and LIU/FODPU, CAT-6 Station Cable and Termination Box, and the Electrical Receptacle/Outlet and Ground Bar that are provided on this drawing are for information purposes only.
2. The placement of all these items are being installed under a separate contract.
3. The Installation of all Network Data Switches and Power Supplies with all Mounts and Mounting Hardware/Din Rail, Power Connections to the equipment, Ground Connections to the equipment, Fiber Patch Cords and the CAT-6 Patch Cords in the IT-Cabinet are the Data Network - Vendor/Contractor's Responsibility. The Network Data Switches and Power Supplies shall be provided by Owner.
4. All Fiber and CAT-6 Patch Cords are under a separate contract. All Patch Cords will be provided to the Vendors/Contractors for installation.

WALKER ASSOCIATES, INC.
ENGINEERING, PLANNING, GIS & SURVEYING
917 22nd Avenue - Suite B
Tuscaloosa, AL 35401
www.walkercivil.com
P (205) 561-3778 | F (205) 561-3779

PREPARED FOR:
TUSCALOOSA CITY WALK PROJECT
FOREST LAKE SECTION
Data Network Hardware / System
City of Tuscaloosa
Tuscaloosa, Alabama

APPROVED BY:

REVISIONS:

DATE:	DESCRIPTION

SCALE: NTS
DRAWING No. TD-08
SHEET No. 9 OF 9

JOB NO: TALA-201401

DESIGNED BY: TSW
DRAWN BY: JWT
CHECKED BY: TSW
DATE: 11/19/2015
DRAWING NAME: TD-08

CERTIFIED NARTE ENGINEER
REGISTRATION NO. E-42027
TERRY S. WEAVER
BICSI OSP SPECIALIST
RCDD REGISTRATION NO.12777
OSP REGISTRATION NO. 141086
TALA/ Professional Services
1116 20TH STREET SOUTH, SUITE #306
BIRMINGHAM, ALABAMA 35205
PH. (205) 578-1993
www.TALAPro.com
TALA PROJECT NO. TALA-0004 DESIGNER: TSW

REVISIONS

NO.	DATE	DESCRIPTION	CHKD. APRD.

TUSCALOOSA CITY WALK PROJECT
FOREST LAKE SECTION
Data Network Hardware / System
City of Tuscaloosa
Tuscaloosa, Alabama

DATA NETWORK EQUIPMENT SCHEDULE

ITEM #	DWG #	POLE #	IT-CAB #	FODPU FIBER TERM UNIT #	FIBER ASSIGNMENTS	NETWORK SWITCH #	SWITCH TYPE	VLAN #	FIBER PORT #	NTWK PORT #	CAMERA #	CAMERA TYPE	WAP #	NETWORK SYSTEM EQUIPMENT
1	TD-01	43	CAB21	FODPU-01	(FIBERS 1 & 2)	FL01	TRANSITION NETWORKS/ (1) SISPM1040-384-LRT-B SWITCH W/ (1) 25104 POWER SUPPLY AND (2) GBIC MOD'S/ TN-GLC-LX-SM-RGD OWNER PROVIDED / CONTRACTOR INSTALLED	1	1	1	CAM48	INLINE		TRANSITION NETWORKS/ (1) SISPM1040-384-LRT-B SWITCH W/ (1) 25104 POWER SUPPLY AND (2) GBIC MOD'S/ TN-GLC-LX-SM-RGD OWNER PROVIDED / CONTRACTOR INSTALLED
2	TD-01	43				FL01		1		2	CAM49	BLINDSPOT		
3	TD-01	43				FL01		1		3	CAM50	INLINE		
4	TD-01	43	CAB21	FODPU-01	(FIBERS 3 & 4)	FL01		2	2	5			WAP6	
5	TD-01	42	CAB20	FODPU-02	(FIBERS 7 & 8)	FL02	TRANSITION NETWORKS/ (1) SISPM1040-384-LRT-B SWITCH W/ (1) 25104 POWER SUPPLY AND (2) GBIC MOD'S/ TN-GLC-LX-SM-RGD OWNER PROVIDED / CONTRACTOR INSTALLED	1	1	1	CAM46	INLINE		TRANSITION NETWORKS/ (1) SISPM1040-384-LRT-B SWITCH W/ (1) 25104 POWER SUPPLY AND (2) GBIC MOD'S/ TN-GLC-LX-SM-RGD OWNER PROVIDED / CONTRACTOR INSTALLED
6	TD-01	42				FL02		1		2	CAM47	INLINE		
7	TD-01	40	CAB19	FODPU-03	(FIBERS 13 & 14)	FL03	TRANSITION NETWORKS/ (1) SISPM1040-384-LRT-B SWITCH W/ (1) 25104 POWER SUPPLY AND (2) GBIC MOD'S/ TN-GLC-LX-SM-RGD OWNER PROVIDED / CONTRACTOR INSTALLED	1	1	1	CAM44	INLINE		TRANSITION NETWORKS/ (1) SISPM1040-384-LRT-B SWITCH W/ (1) 25104 POWER SUPPLY AND (2) GBIC MOD'S/ TN-GLC-LX-SM-RGD OWNER PROVIDED / CONTRACTOR INSTALLED
8	TD-01	40				FL03		1		2	CAM45	INLINE		
9	TD-01	38	CAB18	FODPU-04	(FIBERS 19 & 20)	FL04	TRANSITION NETWORKS/ (1) SISPM1040-384-LRT-B SWITCH W/ (1) 25104 POWER SUPPLY AND (2) GBIC MOD'S/ TN-GLC-LX-SM-RGD OWNER PROVIDED / CONTRACTOR INSTALLED	1	1	1	CAM41	INLINE		TRANSITION NETWORKS/ (1) SISPM1040-384-LRT-B SWITCH W/ (1) 25104 POWER SUPPLY AND (2) GBIC MOD'S/ TN-GLC-LX-SM-RGD OWNER PROVIDED / CONTRACTOR INSTALLED
10	TD-01	38				FL04		1		2	CAM42	BLINDSPOT		
11	TD-01	38				FL04		1		3	CAM43	INLINE		
12	TD-01	35	CAB17	FODPU-05	(FIBERS 25 & 26)	FL05	TRANSITION NETWORKS/ (1) SISPM1040-384-LRT-B SWITCH W/ (1) 25104 POWER SUPPLY AND (2) GBIC MOD'S/ TN-GLC-LX-SM-RGD OWNER PROVIDED / CONTRACTOR INSTALLED	1	1	1	CAM39	INLINE		TRANSITION NETWORKS/ (1) SISPM1040-384-LRT-B SWITCH W/ (1) 25104 POWER SUPPLY AND (2) GBIC MOD'S/ TN-GLC-LX-SM-RGD OWNER PROVIDED / CONTRACTOR INSTALLED
13	TD-01	35				FL05		1		2	CAM40	INLINE		
14	TD-01	33	CAB16	FODPU-06	(FIBERS 31 & 32)	FL06	TRANSITION NETWORKS/ (1) SISPM1040-384-LRT-B SWITCH W/ (1) 25104 POWER SUPPLY AND (2) GBIC MOD'S/ TN-GLC-LX-SM-RGD OWNER PROVIDED / CONTRACTOR INSTALLED	1	1	1	CAM36	INLINE		TRANSITION NETWORKS/ (1) SISPM1040-384-LRT-B SWITCH W/ (1) 25104 POWER SUPPLY AND (2) GBIC MOD'S/ TN-GLC-LX-SM-RGD OWNER PROVIDED / CONTRACTOR INSTALLED
15	TD-01	33				FL06		1		2	CAM37	BLINDSPOT		
16	TD-01	33				FL06		1		3	CAM38	INLINE		
17	TD-01	33	CAB16	FODPU-06	(FIBERS 33 & 34)	FL06		2	2	5			WAP5	
18	TD-02	30	CAB15	FODPU-07	(FIBERS 37 & 38)	FL07	TRANSITION NETWORKS/ (1) SISPM1040-384-LRT-B SWITCH W/ (1) 25104 POWER SUPPLY AND (2) GBIC MOD'S/ TN-GLC-LX-SM-RGD OWNER PROVIDED / CONTRACTOR INSTALLED	1	1	1	CAM34	INLINE		TRANSITION NETWORKS/ (1) SISPM1040-384-LRT-B SWITCH W/ (1) 25104 POWER SUPPLY AND (2) GBIC MOD'S/ TN-GLC-LX-SM-RGD OWNER PROVIDED / CONTRACTOR INSTALLED
19	TD-02	30				FL07		1		2	CAM35	INLINE		
20	TD-02	28	CAB14	FODPU-08	(FIBERS 43 & 44)	FL08	TRANSITION NETWORKS/ (1) SISPM1040-384-LRT-B SWITCH W/ (1) 25104 POWER SUPPLY AND (2) GBIC MOD'S/ TN-GLC-LX-SM-RGD OWNER PROVIDED / CONTRACTOR INSTALLED	1	1	1	CAM32	INLINE		TRANSITION NETWORKS/ (1) SISPM1040-384-LRT-B SWITCH W/ (1) 25104 POWER SUPPLY AND (2) GBIC MOD'S/ TN-GLC-LX-SM-RGD OWNER PROVIDED / CONTRACTOR INSTALLED
21	TD-02	28				FL08		1		2	CAM33	INLINE		
22	TD-02	26	CAB13	FODPU-09	(FIBERS 49 & 50)	FL09	TRANSITION NETWORKS/ (1) SISPM1040-384-LRT-B SWITCH W/ (1) 25104 POWER SUPPLY AND (2) GBIC MOD'S/ TN-GLC-LX-SM-RGD OWNER PROVIDED / CONTRACTOR INSTALLED	1	1	1	CAM30	INLINE		TRANSITION NETWORKS/ (1) SISPM1040-384-LRT-B SWITCH W/ (1) 25104 POWER SUPPLY AND (2) GBIC MOD'S/ TN-GLC-LX-SM-RGD OWNER PROVIDED / CONTRACTOR INSTALLED
23	TD-02	26				FL09		1		2	CAM31	INLINE		
24	TD-02	24	CAB16	FODPU-10	(FIBERS 55 & 56)	FL10	TRANSITION NETWORKS/ (1) SISPM1040-384-LRT-B SWITCH W/ (1) 25104 POWER SUPPLY AND (2) GBIC MOD'S/ TN-GLC-LX-SM-RGD OWNER PROVIDED / CONTRACTOR INSTALLED	1	1	1	CAM27	INLINE		TRANSITION NETWORKS/ (1) SISPM1040-384-LRT-B SWITCH W/ (1) 25104 POWER SUPPLY AND (2) GBIC MOD'S/ TN-GLC-LX-SM-RGD OWNER PROVIDED / CONTRACTOR INSTALLED
25	TD-02	24				FL10		1		2	CAM28	BLINDSPOT		
26	TD-02	24				FL10		1		3	CAM29	INLINE		
27	TD-02	24	CAB16	FODPU-10	(FIBERS 57 & 58)	FL10		2	2	5			WAP4	
28	TD-02	22	CAB11	FODPU-11	(FIBERS 61 & 62)	FL11	TRANSITION NETWORKS/ (1) SISPM1040-384-LRT-B SWITCH W/ (1) 25104 POWER SUPPLY AND (2) GBIC MOD'S/ TN-GLC-LX-SM-RGD OWNER PROVIDED / CONTRACTOR INSTALLED	1	1	1	CAM24	INLINE		TRANSITION NETWORKS/ (1) SISPM1040-384-LRT-B SWITCH W/ (1) 25104 POWER SUPPLY AND (2) GBIC MOD'S/ TN-GLC-LX-SM-RGD OWNER PROVIDED / CONTRACTOR INSTALLED
29	TD-02	22				FL11		1		2	CAM25	BLINDSPOT		
30	TD-02	22				FL11		1		3	CAM26	INLINE		
31	TD-02	20	CAB10	FODPU-12	(FIBERS 67 & 68)	FL12	TRANSITION NETWORKS/ (1) SISPM1040-384-LRT-B SWITCH W/ (1) 25104 POWER SUPPLY AND (2) GBIC MOD'S/ TN-GLC-LX-SM-RGD OWNER PROVIDED / CONTRACTOR INSTALLED	1	1	1	CAM22	INLINE		TRANSITION NETWORKS/ (1) SISPM1040-384-LRT-B SWITCH W/ (1) 25104 POWER SUPPLY AND (2) GBIC MOD'S/ TN-GLC-LX-SM-RGD OWNER PROVIDED / CONTRACTOR INSTALLED
32	TD-02	20				FL12		1		2	CAM23	INLINE		
33	TD-02	17	CAB09	FODPU-13	(FIBERS 73 & 74)	FL13	TRANSITION NETWORKS/ (1) SISPM1040-384-LRT-B SWITCH W/ (1) 25104 POWER SUPPLY AND (2) GBIC MOD'S/ TN-GLC-LX-SM-RGD OWNER PROVIDED / CONTRACTOR INSTALLED	1	1	1	CAM19	INLINE		TRANSITION NETWORKS/ (1) SISPM1040-384-LRT-B SWITCH W/ (1) 25104 POWER SUPPLY AND (2) GBIC MOD'S/ TN-GLC-LX-SM-RGD OWNER PROVIDED / CONTRACTOR INSTALLED

DATA NETWORK EQUIPMENT SCHEDULE CONTINUED

ITEM #	DWG #	POLE #	IT-CAB #	FODPU FIBER TERM UNIT #	FIBER ASSIGNMENTS	NETWORK SWITCH #	SWITCH TYPE	VLAN #	FIBER PORT #	NTWK PORT #	CAMERA #	CAMERA TYPE	WAP #	NETWORK SYSTEM EQUIPMENT
34	TD-02	17				FL13		1		2	CAM20	BLINDSPOT		
35	TD-02	17				FL13		1		3	CAM21	INLINE		
36	TD-02	17	CAB09	FODPU-13	(FIBERS 75 & 76)	FL13		2	2	5			WAP3	
37	TD-03	15	CAB08	FODPU-14	(FIBERS 79 & 80)	FL14	TRANSITION NETWORKS/ (1) SISPM1040-384-LRT-B SWITCH W/ (1) 25104 POWER SUPPLY AND (2) GBIC MOD'S/ TN-GLC-LX-SM-RGD OWNER PROVIDED / CONTRACTOR INSTALLED	1	1	1	CAM17	INLINE		TRANSITION NETWORKS/ (1) SISPM1040-384-LRT-B SWITCH W/ (1) 25104 POWER SUPPLY AND (2) GBIC MOD'S/ TN-GLC-LX-SM-RGD OWNER PROVIDED / CONTRACTOR INSTALLED
38	TD-03	15				FL14		1		2	CAM18	INLINE		
39	TD-03	13	CAB07	FODPU-15	(FIBERS 85 & 86)	FL15	TRANSITION NETWORKS/ (1) SISPM1040-384-LRT-B SWITCH W/ (1) 25104 POWER SUPPLY AND (2) GBIC MOD'S/ TN-GLC-LX-SM-RGD OWNER PROVIDED / CONTRACTOR INSTALLED	1	1	1	CAM15	INLINE		TRANSITION NETWORKS/ (1) SISPM1040-384-LRT-B SWITCH W/ (1) 25104 POWER SUPPLY AND (2) GBIC MOD'S/ TN-GLC-LX-SM-RGD OWNER PROVIDED / CONTRACTOR INSTALLED
40	TD-03	13				FL15		1		2	CAM16	INLINE		
41	TD-03	11	CAB06	FODPU-16	(FIBERS 91 & 92)	FL16	TRANSITION NETWORKS/ (1) SISPM1040-384-LRT-B SWITCH W/ (1) 25104 POWER SUPPLY AND (2) GBIC MOD'S/ TN-GLC-LX-SM-RGD OWNER PROVIDED / CONTRACTOR INSTALLED	1	1	1	CAM13	INLINE		TRANSITION NETWORKS/ (1) SISPM1040-384-LRT-B SWITCH W/ (1) 25104 POWER SUPPLY AND (2) GBIC MOD'S/ TN-GLC-LX-SM-RGD OWNER PROVIDED / CONTRACTOR INSTALLED
42	TD-03	11				FL16		1		2	CAM14	INLINE		
43	TD-03	11	CAB06	FODPU-16	(FIBERS 93 & 94)	FL16		2	2	5			WAP2	
44	TD-03	9	CAB05	FODPU-17	(FIBERS 97 & 98)	FL17	TRANSITION NETWORKS/ (1) SISPM1040-384-LRT-B SWITCH W/ (1) 25104 POWER SUPPLY AND (2) GBIC MOD'S/ TN-GLC-LX-SM-RGD OWNER PROVIDED / CONTRACTOR INSTALLED	1	1	1	CAM11	INLINE		TRANSITION NETWORKS/ (1) SISPM1040-384-LRT-B SWITCH W/ (1) 25104 POWER SUPPLY AND (2) GBIC MOD'S/ TN-GLC-LX-SM-RGD OWNER PROVIDED / CONTRACTOR INSTALLED
45	TD-03	9				FL17		1		2	CAM12	INLINE		
46	TD-03	7	CAB04	FODPU-18	(FIBERS 103 & 104)	FL18	TRANSITION NETWORKS/ (1) SISPM1040-384-LRT-B SWITCH W/ (1) 25104 POWER SUPPLY AND (2) GBIC MOD'S/ TN-GLC-LX-SM-RGD OWNER PROVIDED / CONTRACTOR INSTALLED	1	1	1	CAM9	INLINE		TRANSITION NETWORKS/ (1) SISPM1040-384-LRT-B SWITCH W/ (1) 25104 POWER SUPPLY AND (2) GBIC MOD'S/ TN-GLC-LX-SM-RGD OWNER PROVIDED / CONTRACTOR INSTALLED
47	TD-03	7				FL18		1		2	CAM10	INLINE		
48	TD-03	5	CAB03	FODPU-19	(FIBERS 109 & 110)	FL19	TRANSITION NETWORKS/ (1) SISPM1040-384-LRT-B SWITCH W/ (1) 25104 POWER SUPPLY AND (2) GBIC MOD'S/ TN-GLC-LX-SM-RGD OWNER PROVIDED / CONTRACTOR INSTALLED	1	1	1	CAM7	INLINE		TRANSITION NETWORKS/ (1) SISPM1040-384-LRT-B SWITCH W/ (1) 25104 POWER SUPPLY AND (2) GBIC MOD'S/ TN-GLC-LX-SM-RGD OWNER PROVIDED / CONTRACTOR INSTALLED
49	TD-03	5				FL19		1		2	CAM8	INLINE		
50	TD-03	3	CAB02	FODPU-20	(FIBERS 115 & 116)	FL20	TRANSITION NETWORKS/ (1) SISPM1040-384-LRT-B SWITCH W/ (1) 25104 POWER SUPPLY AND (2) GBIC MOD'S/ TN-GLC-LX-SM-RGD OWNER PROVIDED / CONTRACTOR INSTALLED	1	1	1	CAM5	INLINE		TRANSITION NETWORKS/ (1) SISPM1040-384-LRT-B SWITCH W/ (1) 25104 POWER SUPPLY AND (2) GBIC MOD'S/ TN-GLC-LX-SM-RGD OWNER PROVIDED / CONTRACTOR INSTALLED
51	TD-03	3				FL20		1		2	CAM6	INLINE		
52	TD-03	1	CAB01	FODPU-21	(FIBERS 121 & 122)	FL21	TRANSITION NETWORKS/ (1) SISPM1040-384-LRT-B SWITCH W/ (1) 25104 POWER SUPPLY AND (2) GBIC MOD'S/ TN-GLC-LX-SM-RGD OWNER PROVIDED / CONTRACTOR INSTALLED	1	1	1	CAM1	INLINE		TRANSITION NETWORKS/ (1) SISPM1040-384-LRT-B SWITCH W/ (1) 25104 POWER SUPPLY AND (2) GBIC MOD'S/ TN-GLC-LX-SM-RGD OWNER PROVIDED / CONTRACTOR INSTALLED
53	TD-03	1				FL21		1		2	CAM2	BLINDSPOT		
54	TD-03	1				FL21		1		3	CAM3	INLINE		
55	TD-03	1				FL21		1		4	CAM4	INLINE		
56	TD-03	1	CAB01	FODPU-21	(FIBERS 123 & 124)	FL21		2	2	5			WAP1	
57	TD-04	COMFORT CNTR/ IT-COMM RM.	COMM. CNTR IT-CAB. #CO2	COMM. CNTR. NTWK LINKAGE CABLE	COMM. CNTR. NTWK LINKAGE CABLE	COMM. CNTR. NTWK SW-FL22 (48 PORT SW.)	CISCO/WS-C3750X-48P-E W/ (2) P/S	2	COMM. CNTR. NTWK LINKAGE CABLE	43			WAP7	CISCO/WS-C3750X-48P-E W/ (2) P/S
59	TD-03	COMFORT CNTR/ IT-COMM RM.	COMM. CNTR IT-CAB. #CO2	COMM. CNTR. NTWK LINKAGE CABLE	COMM. CNTR. NTWK LINKAGE CABLE	COMM. CNTR. NTWK FIBER SW-FL/F01 (24 PORT FIBER SW.)	CISOC/WS-C3750X-24S-E W/ (2) P/S & (24) TN-GLC-LH-SM MOD'S OWNER PROVIDED / CONTRACTOR INSTALLED		COMM. CNTR. NTWK LINKAGE CABLE		N/A	N/A		CISOC/WS-C3750X-24S-E W/ (2) P/S & (24) TN-GLC-LH-SM MOD'S OWNER PROVIDED / CONTRACTOR INSTALLED
60	TD-03	COMFORT CNTR/ IT-COMM RM.	COMM. CNTR IT-CAB. #CO2	COMM. CNTR. NTWK LINKAGE CABLE	COMM. CNTR. NTWK LINKAGE CABLE	COMM. CNTR. NTWK FIBER SW-FL/F02 (24 PORT FIBER SW.)	CISOC/WS-C3750X-24S-E W/ (2) P/S & (24) TN-GLC-LH-SM MOD'S OWNER PROVIDED / CONTRACTOR INSTALLED		COMM. CNTR. NTWK LINKAGE CABLE		N/A	N/A		CISOC/WS-C3750X-24S-E W/ (2) P/S & (24) TN-GLC-LH-SM MOD'S OWNER PROVIDED / CONTRACTOR INSTALLED
61	TD-03	COMFORT CNTR/ IT-COMM RM.	COMM. CNTR IT-CAB. #CO2	COMM. CNTR. NTWK LINKAGE CABLE	COMM. CNTR. NTWK LINKAGE CABLE	COMM. CNTR. NTWK SW-FL22 (48 PORT SW.)	CISOC/WS-C3750X-48P-E W/ (2) P/S OWNER PROVIDED / CONTRACTOR INSTALLED		COMM. CNTR. NTWK LINKAGE CABLE		N/A	N/A		CISOC/WS-C3750X-48P-E W/ (2) P/S OWNER PROVIDED / CONTRACTOR INSTALLED
63	TD-03	COMFORT CNTR/ IT-COMM RM.	COMM. CNTR IT-CAB. #CO1			COMM. CNTR. NTWK UPS UNIT- UPS01 W/ BATTERY UNIT-BAT01	EATON/ UPS UNIT-PW9130L3000R-XL2UN BATTERY UNIT-PW9130N3000R-EBM2U OWNER PROVIDED / CONTRACTOR INSTALLED				N/A	N/A		EATON/ UPS UNIT-PW9130L3000R-XL2UN BATTERY UNIT-PW9130N3000R-EBM2U OWNER PROVIDED / CONTRACTOR INSTALLED
64	TD-03	COMFORT CNTR/ IT-COMM RM.	COMM. CNTR IT-CAB. #CO2			COMM. CNTR. NTWK UPS UNIT- UPS02 W/ BATTERY UNIT-BAT02	EATON/ UPS UNIT-PW9130L3000R-XL2UN BATTERY UNIT-PW9130N3000R-EBM2U OWNER PROVIDED / CONTRACTOR INSTALLED				N/A	N/A		EATON/ UPS UNIT-PW9130L3000R-XL2UN BATTERY UNIT-PW9130N3000R-EBM2U OWNER PROVIDED / CONTRACTOR INSTALLED

NOTE #1:

ALL DATA NETWORK HARDWARE EQUIPMENT SHALL BE PURCHASED AND PROVIDED BY THE OWNER. THE CONTRACTOR SHALL INSTALL ALL EQUIPMENT AND PATCH CORDS/JUMPERS (CAT6 - COPPER / FIBER.)

NOTE #2:

THE CONTRACTORS/VENDORS FOR THE FIBER INFRASTRUCTURE SYSTEM, SECURITY CAMERA SYSTEM, WIRELESS NETWORK SYSTEM, AND THE DATA NETWORK SYSTEM SHALL COORDINATE AND SET UP ALL SYSTEM RECORDS INCLUDING BUT NOT LIMITED TO THE FOLLOWING: THE IT-CABINET NUMBERS, EQUIPMENT CABINET NUMBERS, SWITCH NUMBERS, FIBER PANEL NUMBERS, FIBER CABLING NUMBERING, FIBER SPLICE CASE NUMBERS, QB-VAULTS NUMBERS, CAMERA NUMBERS, WAP NUMBERS, FIBER ASSIGNMENTS, SWITCH PORT ASSIGNMENTS, JACK ID ASSIGNMENTS, DATA STATION PATCH PANEL PORT ASSIGNMENTS, IP NUMBER ASSIGNMENTS, AND MAC ADDRESSES FOR ALL DEVICES CONNECTED TO EACH SECTION OF THE NETWORK SYSTEM. THE INFORMATION FROM EACH CONTRACTOR/VENDOR SHALL BE COORDINATED WITH THE DESIGNER/CONSULTANT AND THE CMS/FMS - RECORD MANAGEMENT SYSTEM CONTRACTOR/VENDOR.

ABBREVIATIONS:

110 BLK	110 BLOCK
A	AMPERE
ADS	ABOVE DESK TOP SURFACE
AFF	ABOVE FINISHED FLOOR
AFG	ABOVE FINISHED GRADE
ANSI	AMERICAN NATIONAL STANDARDS INSTITUTE
AWG	AMERICAN WIRE GAUGE
BB	BACKBONE
BDF	BUILDING DISTRIBUTION FRAME
BLDG	BUILDING
BSG	BUILDING SERVICE GROUND
C	CONDUIT
CA	CABLE
CAT6	CATEGORY 6
CATV	CABLE TELEVISION
CIRC	CIRCUIT
CL	CEILING MOUNTED
CMP	COMMUNICATION PLENUM CABLE
CMR	COMMUNICATION RISER CABLE
COMM	COMMUNICATIONS
CR	COMPUTER ROOM
CT	COUNTER TOP
CW	CASEWORK
CX	COAX CABLE
DB	DIRECT BURIED
DDC	HVAC DIGITAL CONTROLLER
EC	EMPTY CONDUIT WITH PULL STRING
EF	ENTRANCE FACILITY
EIA	ELECTRONIC INDUSTRIES ALLIANCE
EM	EMERGENCY
EMI	ELECTROMAGNETIC INTERFERENCE
EMT	ELECTRICAL METALLIC TUBING
EX	EXISTING TO REMAIN
FACP	FIRE ALARM CONTROL PANEL
FATC	FIRE ALARM TERMINAL CABINET
FIO	FOR INFORMATION ONLY
FO	FIBER OPTIC
FOC	FIBER OPTIC CABLE
FUT	FUTURE
GND	GROUND
IDF	INTERMEDIATE DISTRIBUTION FRAME
ISP	INSIDE PLANT
LAN	LOCAL AREA NETWORK
LEC	LOCAL EXCHANGE CARRIER
M	METER
MDF	MAIN DISTRIBUTION FRAME
MH	MANHOLE
MHz	MEGAHERTZ
MM	MULTIMODE
MMF	MULTIMODE FIBER
MT	MOUNT
MTG HT	MOUNTING HEIGHT
N/A	NOT APPLICABLE
NEC	NATIONAL ELECTRICAL CODE
NEMA	NATIONAL ELECTRICAL MANUFACTURERS ASSOCIATION
NESC	NATIONAL ELECTRICAL SAFETY CODE
NFPA	NATIONAL FIRE PROTECTION ASSOCIATION
NIC	NOT IN CONTRACT
NTS	NOT TO SCALE
OC	ON CENTER
OFH	OPTICAL FIBER HORIZONTAL
OFOP	OPTICAL FIBER OUTSIDE PLANT
OFR	OPTICAL FIBER RISER
OSP	OUTSIDE PLANT
P/C	PATCH CORD
P/P	PATCH PANEL
PB	PULL BOX
PBX	PRIVATE BRANCH EXCHANGE
PC	PERSONAL COMPUTER
PDS	PREMISES DISTRIBUTION SYSTEM
PL	PLACE
PR	PAIR
PT	PART
PVC	POLYVINYL CHLORIDE
REQ'D	REQUIRED
REQR	RELAY EQUIPMENT RACK
RM	ROOM
RMU	RACK MOUNT UNIT
SIM	SIMILAR
SM	SURFACE MOUNTED
SMF	SINGLE-MODE FIBER
STR	STRAND
TBB	TELECOMMUNICATION BONDING BACKBONE
TBBIBC	TBB INTERCONNECTING BONDING CONDUCTOR
TBD	TO BE DETERMINED
TER	TELECOMMUNICATIONS/TELEPHONE EQUIPMENT ROOM
TGB	TELECOMMUNICATIONS GROUNDING BUSBAR
TIA	TELECOMMUNICATIONS INDUSTRY ASSOCIATION
TMGB	TELECOMMUNICATIONS MAIN GROUNDING BUSBAR
TPH	TWISTED PAIR HORIZONTAL
TPOP	TWISTED PAIR OUTSIDE PLANT
TPR	TWISTED PAIR RISER
TR	TELECOMMUNICATIONS ROOM
TYP	TYPICAL
UG	UNDERGROUND CONDUIT
UL	UNDERWRITERS LABORATORIES
um	MICRON OR MICROMETER
UNO	UNLESS NOTED OTHERWISE
UON	UNLESS OTHERWISE NOTED
UPS	UNINTERRUPTIBLE POWER SUPPLY
UTP	UNSHIELDED TWISTED-PAIR
VD	VOICE/DATA
VDBB	VOICE/DATA BACKBOARD
WA	WORK AREA
WG	WIREGUARD
WP	INDICATES WEATHERPROOF EQUIPMENT
WS	WORKSTATION
X-CONN	CROSS-CONNECT

WALKER ASSOCIATES, INC.
ENGINEERING, PLANNING, GIS & SURVEYING
917 22nd Avenue - Suite B
Tuscaloosa, AL 35401
www.walkercivil.com
P (205) 561-3778 | F (205) 561-3779

PREPARED FOR

TUSCALOOSA CITY WALK PROJECT
FOREST LAKE SECTION
Data Network Hardware / System
City of Tuscaloosa
Tuscaloosa, Alabama

APPROVED BY:

REVISIONS:

DATE:	DESCRIPTION

SCALE: NTS

DRAWING No. TD-CO

SHEET No. 1 OF 9

JOB NO: TALA-201401

DESIGNED BY: TSW

DRAWN BY: JWT

CHECKED BY: TSW

DATE: 11/19/2015

DRAWING NAME: TD-CO

CERTIFIED NARTE ENGINEER
REGISTRATION NO. E2-02027

BICSI REGISTERED COMMUNICATIONS DISTRIBUTION DESIGNER
OSP SPECIALIST
RCDD REGISTRATION NO.12777
OSP REGISTRATION NO. 141588

TERRY S. WEAVER

TALA/ Professional Services
1116 20TH STREET SOUTH, SUITE #306
BIRMINGHAM, ALABAMA 35205
PH. (205) 578-1993
www.TALAPro.com

TALA PROJECT NO. TALA-0004 | DESIGNER: TSW

REVISIONS

NO.	DATE	DESCRIPTION	CHKD. APRD.